BOSCH

Register your new device on MyBosch now and get free benefits:
bosch-home.com/welcome

MyBosch

Oven

CMG836N.1

[en] User manual and installation instructions

Futher information and explanations are available online:

Table of contents

INFORMATION FOR USE

1 Safety 2
2 Preventing material damage 6
3 Environmental protection and saving energy 7
4 Familiarising yourself with your appliance 8
5 Operating modes 10
6 Accessories 11
7 Before using for the first time 13
8 Basic operation 13
9 Rapid heating 14
10 Time-setting options 15
11 Microwave 16
12 Assist 18
13 Childproof lock 19
14 Sabbath mode 20
15 Basic settings 20
16 Cleaning and servicing 21
17 Cleaning assistance 23
18 Drying 23
19 Rails 24
20 Appliance door 25
21 Troubleshooting 26
22 Disposal 27
23 Customer Service 28
24 How it works 28

25 INSTALLATION INSTRUCTIONS 36
25.1 General installation instructions 37

⚠ 1 Safety

Observe the following safety instructions.

1.1 General information

- Read this instruction manual carefully.
- Keep the instruction manual and the product information safe for future reference or for the next owner.
- Do not connect the appliance if it has been damaged in transit.

1.2 Intended use

This appliance is designed only to be built into kitchen units. Read the special installation instructions.
Only a licensed professional may connect appliances without plugs. Damage caused by incorrect connection is not covered under the warranty.
Only use this appliance:

- To prepare meals and drinks.
- For household use and similar applications, such as: In kitchens for employees in shops, offices and other commercial sectors; in agriculture; by customers in hotels and other residential facilities; in bed and breakfasts.
- Up to an altitude of max. 4000 m above sea level.

This appliance complies with the standards EN 55011 and CISPR 11. It is a group 2, class B product. Group 2 means that microwaves are produced for the purpose of heating food. Class B means that the appliance is suitable for private households.

1.3 Restriction on user group

This appliance may be used by children aged 8 or over and by people who have reduced physical, sensory or mental abilities or inadequate experience and/or knowledge, provided that they are supervised or have

been instructed on how to use the appliance safely and have understood the resulting dangers.
Do not let children play with the appliance.
Children must not perform cleaning or user maintenance unless they are at least 15 years old and are being supervised.
Keep children under the age of 8 years away from the appliance and power cable.

1.4 Safe use

Always place accessories in the cooking compartment the right way round.
→ *"Accessories", Page 11*

⚠ WARNING – Risk of fire!

Combustible objects that are left in the cooking compartment may catch fire.
- Never store combustible objects in the cooking compartment.
- If smoke is emitted, the appliance must be switched off or the plug must be pulled out and the door must be held closed in order to stifle any flames.

Loose food remnants, fat and meat juices may catch fire.
- Before using the appliance, remove the worst of the food residues and remnants from the cooking compartment, heating elements and accessories.

Opening the appliance door creates a draught. Greaseproof paper may come into contact with the heating element and catch fire.
- Never place greaseproof paper loosely over accessories when preheating the appliance and while cooking.
- Always cut greaseproof paper to size and use a plate or baking tin to hold it down.

⚠ WARNING – Risk of burns!

The appliance and its parts that can be touched become hot during use.
- Caution should be exercised here in order to avoid touching heating elements.
- Young children under 8 years of age must be kept away from the appliance.

Accessories and cookware get very hot.
- Always use oven gloves to remove accessories or cookware from the cooking compartment.

When the cooking compartment is hot, any alcoholic vapours inside may catch fire. The appliance door may spring open. Hot steam and jets of flame may escape.
- Only use small quantities of drinks with a high alcohol content in food.
- Do not heat spirits (≥ 15% vol.) when undiluted (e.g. for marinating or pouring over food).
- Open the appliance door carefully.

The telescopic shelves become hot when the appliance is in use.
- Allow hot telescopic shelves to cool down before touching them.
- Only touch hot telescopic shelves with oven gloves.

⚠ WARNING – Risk of scalding!

The accessible parts of the appliance become hot during operation.
- Never touch these hot parts.
- Keep children at a safe distance.

Hot steam may escape when you open the appliance door. Steam may not be visible, depending on the temperature.
- Open the appliance door carefully.
- Keep children at a safe distance.

If there is water in the cooking compartment when it is hot, this may create hot steam.
- Never pour water into the cooking compartment when the cooking compartment is hot.

⚠ WARNING – Risk of injury!

Scratched glass in the appliance door may develop into a crack.
- Do not use any harsh or abrasive cleaners or sharp metal scrapers to clean the glass on the oven door, as they may scratch the surface.

The appliance and its parts that can be touched may have sharp edges.
- Take care when handling and cleaning them.
- If possible, wear protective gloves.

The hinges on the appliance door move when the door is opened and closed, which could trap your fingers.
- Keep your hands away from the hinges.

Components inside the appliance door may have sharp edges.
- Wear protective gloves.

Alcoholic vapours may catch fire in the hot cooking compartment, and the appliance door may spring open and may fall off. The door panels may shatter and fragment.
→ *"Preventing material damage", Page 6*
- Only use small quantities of drinks with a high alcohol content in food.
- Do not heat spirits (≥ 15% vol.) when undiluted (e.g. for marinating or pouring over food).
- Open the appliance door carefully.

⚠ WARNING – Risk of electric shock!
Incorrect repairs are dangerous.
- Repairs to the appliance should only be carried out by trained specialist staff.
- Only use genuine spare parts when repairing the appliance.
- If the power cord of this appliance is damaged, it must be replaced by the manufacturer, the manufacturer's Customer Service or a similarly qualified person in order to prevent any risk.

If the insulation of the power cord is damaged, this is dangerous.
- Never let the power cord come into contact with hot appliance parts or heat sources.
- Never let the power cord come into contact with sharp points or edges.
- Never kink, crush or modify the power cord.

An ingress of moisture can cause an electric shock.
- Do not use steam- or high-pressure cleaners to clean the appliance.

If the appliance or the power cord is damaged, this is dangerous.
- Never operate a damaged appliance.
- Never pull on the power cord to unplug the appliance. Always unplug the appliance at the mains.
- If the appliance or the power cord is damaged, immediately unplug the power cord or switch off the fuse in the fuse box.
- Call customer services. → *Page 28*

⚠ WARNING – Danger: Magnetism!
Permanent magnets are used in the control panel or in the controls. These may affect electronic implants, e.g. heart pacemakers or insulin pumps.
- Wearers of electronic implants must stay at least 10 cm away from the control panel.

⚠ WARNING – Risk of suffocation!
Children may put packaging material over their heads or wrap themselves up in it and suffocate.
- Keep packaging material away from children.
- Do not let children play with packaging material.

Children may breathe in or swallow small parts, causing them to suffocate.
- Keep small parts away from children.
- Do not let children play with small parts.

1.5 Microwave

CAREFULLY READ THE IMPORTANT SAFETY INSTRUCTIONS AND KEEP THEM SAFE FOR FUTURE USE

⚠ WARNING – Risk of fire!
Using the appliance for anything other than its intended purpose is dangerous and may cause damage. For example, heated slippers and pillows filled with grain or cereal may catch fire, even several hours later.
- Never dry food or clothing with the appliance.
- Never heat up slippers, pillows filled with grain or cereal, sponges, damp cleaning cloths or similar with the appliance.
- The appliance must only be used to prepare food and drink.

Food and its packaging and containers may catch fire.
- Never heat food in heat-retaining packaging.
- Do not leave food unattended while it is heating in containers made of plastic, paper or other combustible materials.
- Never set the microwave power too high or the cooking time too long. Follow the instructions provided in this user manual.
- Never use the microwave to dry food.
- Never defrost or heat food with a low water content, such as bread, at too high a microwave power or for too long.

Cooking oil may catch fire.
- Never use the microwave to heat cooking oil on its own.

⚠ WARNING – Risk of explosion!

Liquids and other food may easily explode when in containers that have been tightly sealed.

- Never heat liquids or other food in containers that have been tightly sealed.

⚠ WARNING – Risk of burns!

Foods with peel or skin may burst or explode during heating, or even afterwards.

- Never cook eggs in their shell or heat hard-boiled eggs in their shell.
- Never cook shellfish or crustaceans.
- Always prick the yolk of eggs before microwaving.
- The skin of foods that have a peel or skin, such as apples, tomatoes, potatoes and sausages, may burst. Before heating, prick the peel or skin.

Heat is not distributed evenly through baby food.

- Never heat baby food in closed containers.
- Always remove the lid or teat.
- Stir or shake well after heating.
- Check the temperature before giving the food or drink to a child.

Heated food gives off heat. The cookware may become hot.

- Always use oven gloves to remove cookware or accessories from the cooking compartment.

Airtight packaging may burst when food is heated.

- Always follow the instructions on the packaging.
- Always use oven gloves to remove the dishes from the cooking compartment.

The accessible parts of the appliance become hot during operation.

- Never touch these hot parts.
- Keep children at a safe distance.

At the highest settings in microwave only mode, the drying function will automatically switch on an additional heating element to heat the cooking compartment.

- Never touch the inside surfaces of the cooking compartment or the heating elements while they are hot.
- Keep children at a safe distance.

Using the appliance for anything other than its intended purpose is dangerous. This is because, for instance, overheated slippers, pillows filled with grain or cereal, sponges and damp cleaning cloths, etc., may cause burns to the skin.

- Never dry food or clothing with the appliance.
- Never heat up slippers, pillows filled with grain or cereal, sponges, damp cleaning cloths or similar with the appliance.
- The appliance must only be used to prepare food and drink.

⚠ WARNING – Risk of scalding!

There is a possibility of delayed boiling when a liquid is heated. This means that the liquid reaches the boiling temperature without the usual steam bubbles rising to the surface. Exercise caution even when only gently shaking the container. The hot liquid may suddenly boil over and splatter.

- Always place a spoon in the container when heating liquids. This prevents delayed boiling.

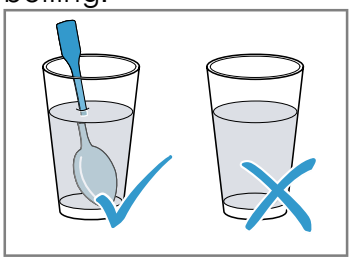

⚠ WARNING – Risk of injury!

Unsuitable cookware may crack. Porcelain or ceramic cookware can have small perforations in the handles and lid. These perforations conceal a cavity below. If moisture penetrates this cavity, it could cause the cookware to crack.

- Only use microwave-safe cookware.

Cookware and containers made from metal or cookware with metal edging may lead to sparks being formed during simple microwave operation. The appliance is damaged.

- Never use metal containers during microwave-only operation.
- Only use microwave-safe cookware or use the microwave in combination with a type of heating.

⚠ **WARNING – Risk of electric shock!**
The appliance uses a high voltage.
- Never remove the casing.

⚠ **WARNING – Risk of serious harm to health!**
Inadequate cleaning may destroy the surface of the appliance, reduce its service life, and lead to dangerous situations, such as escaping microwave energy.
- Clean the appliance on a regular basis, and remove any food residue immediately.
- Always keep the cooking compartment, door seal, door and door stop clean.
  → *"Cleaning and servicing", Page 21*

Never operate the appliance if the cooking compartment door or the door seal is damaged. Microwave energy may escape.
- Never use the appliance if the cooking compartment door, the door seal or the plastic door frame is damaged.
- Any repair work must only be carried out by the after-sales service.

Microwave energy will escape from appliances that do not have any casing.
- Never remove the casing.
- Contact our after-sales service if maintenance or repair work is needed.

2 Preventing material damage

2.1 General

ATTENTION!
Alcoholic vapours may catch fire in the hot cooking compartment and cause permanent damage to the appliance. The appliance door may spring open due to an explosion and it may fall off. The door panels may shatter and fragment. Due to the resulting negative pressure, the cooking compartment may become considerably deformed inwards.
- Do not heat spirits (≥ 15% vol.) when undiluted (e.g. for marinating or pouring over food).

If there is water on the cooking compartment floor when operating the appliance at temperatures above 120 °C, this will damage the enamel.
- Do not use the appliance if there is water on the cooking compartment floor.
- Wipe away any water on the cooking compartment floor before operation.

Objects on the cooking compartment floor at over 50 °C will cause heat to build up. The baking and roasting times will no longer be correct and the enamel will be damaged.
- Do not place any accessories, greaseproof paper or foil of any kind on the cooking compartment floor.
- Only place cookware on the cooking compartment floor if a temperature under 50 °C has been set.

When the cooking compartment is hot, any water inside it will create steam. The change in temperature may cause damage.
- Never pour water into the cooking compartment when it is still hot.
- Never place cookware containing water on the cooking compartment floor.

The prolonged presence of moisture in the cooking compartment leads to corrosion.
- Allow the cooking compartment to dry after use.
- Do not keep moist food in the cooking compartment for a long time with the door closed.
- Do not store food in the cooking compartment.

Leaving the appliance to cool down with the door open will damage the front of neighbouring kitchen units over time.
- Always allow the cooking compartment to cool down with the door closed after cooking at high temperatures.
- Take care not to trap anything in the appliance door.
- Only leave the cooking compartment to dry with the door open if a lot of moisture was produced during operation.

Fruit juice dripping from the baking tray leaves stains that cannot be removed.
- When baking very juicy fruit flans, do not pack too much on the baking tray.
- If possible, use the deeper universal pan.

Using oven cleaner in a hot cooking compartment damages the enamel.
- Never use oven cleaner in the cooking compartment when it is still warm.
- Remove all food remnants from the cooking compartment and the appliance door before you next heat up the appliance.

If the seal is very dirty, the appliance door will no longer close properly during operation. This may damage the front of adjacent kitchen units.
- Keep the seal clean at all times.
- Never operate the appliance if the seal is damaged or missing.

Sitting or placing objects on the appliance door may damage it.
- Do not place, hang or support objects on the appliance door.
- Do not place cookware or accessories on the appliance door.

With certain models, accessories may scratch the door pane when closing the appliance door.
- Always push accessories fully into the cooking compartment.

2.2 Microwave

Follow these instructions when using the microwave.

ATTENTION!

Metal touching the wall of the cooking compartment will cause sparks, which may damage the appliance or the inner door pane.

- Metal (e.g. a spoon in a glass) must be kept at least 2 cm from the cooking compartment walls and the inside of the door.

Using accessories directly on top of one another causes sparks.

- Do not combine the wire rack with the universal pan.
- Always place accessories on different levels.

The universal pan and baking tray are not suitable for use with microwave-only mode. Using either of these may create sparks, which will damage the cooking compartment.

- Place accessories on the wire rack supplied.

Placing aluminium containers in the appliance may cause sparks, which will damage the appliance.

- Do not use aluminium containers in the appliance.

Operating the appliance without food in the cooking compartment may lead to overloading.

- Do not switch on the microwave unless there is food inside. The only exception to this rule is when performing a short cookware test.

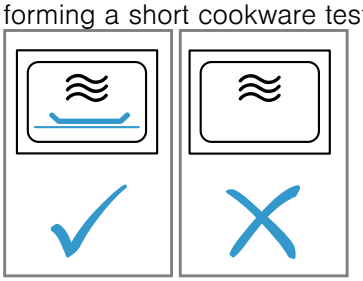

If you prepare microwave popcorn at a microwave power level that is too high, the door pane may crack due to overloading.

- Never set a microwave power level that is too high.
- Use a maximum microwave output of 600 watts.
- Always place the popcorn bag on a glass plate.

3 Environmental protection and saving energy

3.1 Disposing of packaging

The packaging materials are environmentally compatible and can be recycled.

- Sort the individual components by type and dispose of them separately.

3.2 Saving energy

If you follow these instructions, your appliance will use less power.

Only preheat the appliance if the recipe or the recommended settings tell you to do so.

- Not preheating the appliance can reduce the energy used by up to 20%.

Use dark-coloured, black-coated or enamelled baking tins.

- These types of baking tin absorb the heat particularly well.

Open the appliance door as little as possible during operation.

- This maintains the temperature in the cooking compartment and eliminates the need for the appliance to reheat.

When baking multiple dishes, do so in succession or in parallel.

- The cooking compartment is heated after baking the first dish. This reduces the baking time for the second cake.

If the cooking time is relatively long, you can switch the appliance off 10 minutes before the cooking time ends.

- There will be enough residual heat to finish cooking the dish.

Remove any accessories that are not being used from the cooking compartment.

- Accessories that are not being used do not need to be heated.

Allow frozen food to defrost before cooking.

- This saves the energy that would otherwise be required to defrost it.

Note:

The appliance requires:

- A maximum of 1 W in standby mode with the display switched on
- A maximum of 0.5 W in standby mode with the display switched off

4 Familiarising yourself with your appliance

4.1 Control panel

You can use the control panel to configure all functions of your appliance and to obtain information about the operating status.
Note: On certain models, specific details such as colour and shape may differ from those pictured.

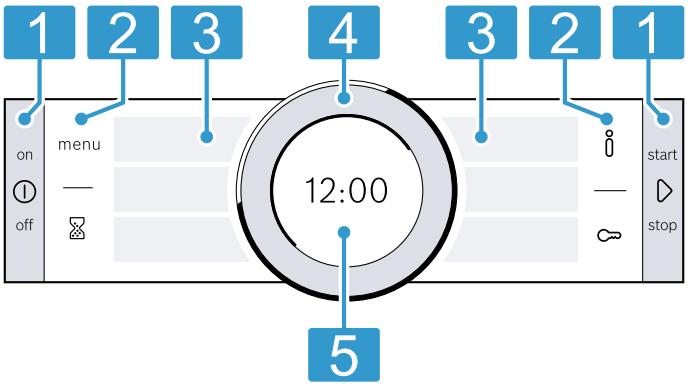

1	**Buttons** The buttons on the left- and right-hand side of the control panel have a pressure point. Pressing a button will execute its function. On appliances without a stainless steel front, the buttons are also touch-sensitive.
2	**Touch fields** Touch fields are touch-sensitive surfaces. To select a function, simply press lightly on the relevant field.
3	**Touch displays** You can see the current selection options in the touch displays. To select a function, press on the corresponding field. The text fields change depending on the selection.
4	**Control ring** The control ring can be turned infinitely in either direction. Press down lightly on the control ring and move it in the direction you require.
5	**Display** The display shows the current setting values or notification texts.

4.2 Buttons

Use the buttons on the left- and right-hand side of the control panel to switch your device or the operating mode on and off.

Button	Function	Use
⏻	On/Off	Switch the appliance on or off.
▷	Start/Stop	Short press: Start or pause operation. Press and hold for approx. three seconds: Cancel operation.

4.3 Touch fields

Use the touch fields to select different functions directly.
The touch field for the function that is currently selected lights up red.

Touch field	Function	Use
menu	Menu	Open the "Operating modes" menu. → *"Operating modes", Page 10*
⌛	Timer	Select the timer.
ℹ	Information	Display additional information about a function or setting.
🔑	Childproof lock	Press and hold for approx. four seconds: Activate or deactivate the childproof lock.

4.4 Touch displays

The touch displays act as both displays and controls. The touch displays are divided into several text fields. The text fields show you the current selection options and settings that have already been implemented. To select a function, press directly on the corresponding field.

The selected function is marked with a red vertical bar on the side of the text field. The value for this is highlighted in white in the Display → *Page 9*.
The small red arrow next to the text field shows you the function that you can scroll back to.

4.5 Control ring

You can use the control ring to change the setting values that are shown in the display and scroll in the touch displays.
When you reach the minimum or maximum value available, this value remains in the display. If required, use the control ring to turn the value back again.

4.6 Display

The display shows the current setting values on different levels.

Value in the foreground	The value in the foreground is highlighted in white. You can use the control ring to change the value directly. Once operation has started, the temperature or level is displayed in the foreground. When using the microwave, the cooking time is displayed in the foreground.
Value in the background	Values in the background are displayed in grey. To change the value using the control ring, select the required function in advance.
Enlargement	As long as you use the control ring to change a value, only this value will be displayed as enlarged.

Display ring

The display ring is located around the outside of the display.

- Position indicator
  If you change a value, the display ring shows you where you are in the selection list. The display ring may be continuous or divided into segments depending on the settings area and the length of the selection list.
- Progress indicator
  During operation, the display ring displays the progress and turns red at second-long intervals.
  As the cooking time counts down, one segment of the display ring disappears every second.

Temperature display

The heating line and the residual heat indicator show you the temperature in the cooking compartment.
Due to thermal inertia, the temperature that is displayed may differ slightly from the actual temperature inside the cooking compartment.

- Heating line
  Once operation has started, the white line below the temperature turns red as the cooking compartment heats up. When you are preheating the appliance, the optimal time to place your food in the cooking compartment is as soon as the entire line has turned red.
  With set levels such as grill settings, the heating line turns red immediately.
  The heating line does not appear when using the microwave.
- Residual heat indicator
  When the appliance is switched off, the display ring shows the residual heat in the cooking compartment. As the residual heat dissipates, the display ring gets darker before eventually disappearing completely.

4.7 Cooking compartment

The functions in the cooking compartment make your appliance easier to use.

Shelf supports

The rails in the cooking compartment enable you to place accessories at different heights.
→ *"Accessories", Page 11*
Your appliance has three shelf positions. The shelf positions are numbered from bottom to top.
The rails are equipped with pull-out rails on one or more levels, depending on the appliance type.
You can remove the rails, e.g. for cleaning.
→ *"Rails", Page 24*

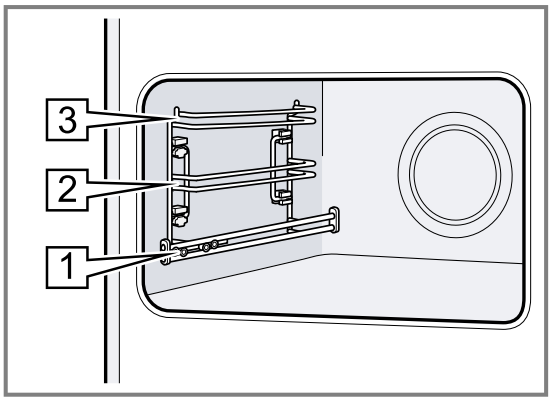

Self-cleaning surfaces

The back panel in the cooking compartment is self-cleaning. The self-cleaning surfaces are coated with a porous, matte ceramic layer and have a coarse surface. When the appliance is in operation, the self-cleaning surfaces absorb splashes from roasting or grilling and break them down.
If the self-cleaning surfaces no longer clean themselves adequately during operation, heat up the cooking compartment specifically to the right temperature.
→ *"Cleaning self-cleaning surfaces in the cooking compartment", Page 22*

Lighting

One or more oven lights illuminate the cooking compartment.
When you open the appliance door, the light in the cooking compartment switches on. If the appliance door remains open for longer than 15 minutes, the light switches off again.
For most operating modes, the lighting is switched on during operation. The lighting switches off again when the operation ends.

Cooling fan

The cooling fan switches on and off depending on the appliance's temperature. The hot air escapes above the door.

ATTENTION!
Do not cover the ventilation slot above the appliance door. The appliance overheats.
- Ensure that the ventilation slots are unobstructed.

To ensure that the appliance cools down more quickly after operation, the cooling fan continues to run for a certain period afterwards.

Appliance door

If you open the appliance door during operation, the operation stops. When you close the appliance door, the operation continues automatically.
In microwave mode, when you close the appliance door, you have to press ▷ to continue.

5 Operating modes

This is where you can find an overview of your appliance's operating modes and main functions.
Press menu to open the menu.

Operating mode	Use
Types of heating	Select finely tuned types of heating for the optimal preparation of your food. → *"Types of heating", Page 10*
Assist	Programmed, recommended settings for various types of food. → *"Assist", Page 18*
Microwave	Cook, heat or defrost quicker with the microwave. → *"Microwave", Page 16*
MicroCombi	To reduce the cooking time, switch on the microwave for a type of heating. → *"MicroCombi", Page 17*
Cleaning	Select the cleaning function for the cooking compartment. → *"Cleaning assistance", Page 23*
Drying	Use after every microwave operation. → *"Drying", Page 23*
Basic settings	Adjust the basic settings. Basic settings → *Page 20*

5.1 Types of heating

To ensure that you always use the right type of heating to cook your food, we explain the differences and applications below.
The symbols for each type of heating help you to remember them.

When you select a type of heating, the appliance suggests a suitable temperature or setting. You can use these values or change them within the specified range.
For temperature settings above 275 °C and grill setting 3, the appliance reduces the temperature to approx. 275 °C or grill setting 1 after approx. 40 minutes.

Symbol	Type of heating	Temperature range	What it's used for and how it works Possible additional options
	4D hot air	30–275 °C	Bake and roast on one or more levels. The fan distributes the heat from the ring-shaped heating element in the back wall evenly around the cooking compartment.
	Top/bottom heating	30–300 °C	Traditionally bake or roast on one level. This type of heating is ideal for cakes with moist toppings. The heat is emitted evenly from above and below.
eco	Hot air eco	30–275 °C	Cook selected dishes gently on one level without preheating. The fan distributes the heat from the ring-shaped heating element in the back wall evenly around the cooking compartment. The food is cooked in phases using residual heat. This type of heating is most effective between 125 and 275 °C. Always keep the appliance door closed when cooking. This type of heating is used to determine the energy consumption in air recirculation mode and the energy efficiency class.
eco	Top/bottom heating eco	30–300 °C	Gently cook selected dishes. Heat is emitted from above and below. This heating function is most effective between 150 and 250 °C. This type of heating is used to measure the energy consumption in the conventional mode.
	Circulated air grilling	30–300 °C	Roast poultry, whole fish or larger pieces of meat. The grill element and the fan switch on and off alternately. The fan circulates the hot air around the food.

Symbol	Type of heating	Temperature range	What it's used for and how it works Possible additional options
	Grill, large area	Grill settings: 1 = low 2 = medium 3 = high	Grill flat items such as steak and sausages, or make toast. Gratinate food. The entire area below the grill element becomes hot.
	Grill, small area	Grill settings: 1 = low 2 = medium 3 = high	Grill small quantities, such as steak, sausages or toast. Gratinate small quantities of food. The central area below the grill element becomes hot.
	Pizza setting	30–275 °C	Cook pizza or dishes that require a lot of heat from below. The bottom heating element and the ring-shaped heating element in the back wall heat the cooking compartment.
	Slow cooking	70–120 °C	Slowly and gently cook seared, tender pieces of meat in uncovered cookware. The heat is emitted evenly from above and below at a low temperature.
	Bottom heating	30–250 °C	Final baking or cooking food in a bain marie. Heat is emitted from below.
	Keeping food warm	60–100 °C	Keep cooked food warm.
	Plate warming	30–70 °C	Plate warming.

5.2 Microwave power settings

This is where you can find an overview of the different microwave power settings and when to use them.
The microwave power settings are levels and do not always correspond to the exact wattage that the appliance uses.

Microwave power setting in watts	Maximum cooking time in hours	Use
90 W	1:30	Defrosting delicate foods.
180 W	1:30	Defrosting food and continuing cooking.
360 W	1:30	Cooking fish and meat. Heating up delicate foods.
600 W	1:30	Heating and cooking food.
Max.	00:30	Heating liquids.

Note: The maximum microwave power setting is not designed for heating food. To protect the appliance, the maximum power of the microwave is gradually reduced to 600 watts during the first few minutes. Full power is made available again after a cooling period.

6 Accessories

Use original accessories. These have been made especially for your appliance.

Note: Accessories may become deformed if they get hot. Deformation has no effect on function. As the accessory cools down, it will regain its original shape.

The accessories supplied may differ depending on the appliance model.

Accessories	Use
Wire rack 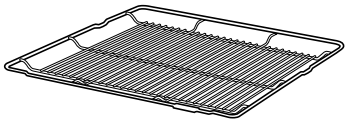	■ Cake tins ■ Ovenproof dishes ■ Cookware ■ Meat, e.g. roasting joints or steak ■ Frozen meals
Universal pan 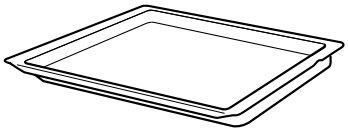	■ Moist cakes ■ Baked items ■ Bread ■ Large roasts ■ Frozen meals ■ Catch dripping liquids, e.g. fat when grilling food on the wire rack.

6.1 Information on accessories

Some accessories are only suitable for certain types of heating.

Microwave accessories

The wire rack that is supplied is only suitable for operation solely using the microwave.
Baking trays, e.g. the universal pan or the baking tray, may create sparks and are not suitable.
Observe the information about the microwave.
→ *"Cookware and accessories with microwave", Page 16*

6.2 Locking function

The locking function prevents the accessories from tilting when they are pulled out.
You can pull out the accessories approximately halfway without them tipping. The accessories must be inserted into the cooking compartment correctly for the tilt protection to work properly.

6.3 Sliding accessories into the cooking compartment

Always slide the accessory into the cooking compartment the right way round. This is the only way to ensure that accessories can be pulled out approximately halfway without tipping.

1. Turn the accessories so that the notch [a] is at the rear and is facing downwards.
2. Insert the accessory between the two guide rods for a shelf position.

Wire rack	Push the wire rack in with the curvature ⌣ pointing downwards. The word "microwave" must be at the front at the appliance door. 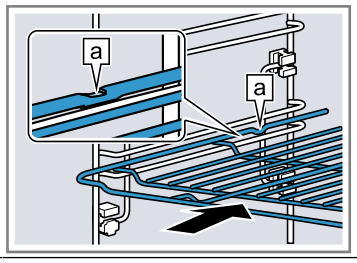
Baking tray E.g. universal pan or baking tray	Slide the tray in with the sloping edge [b] towards the appliance door. 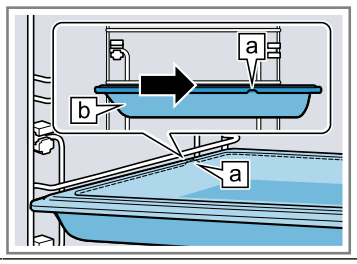

3. To place the accessory at shelf positions with pull-out rails, pull out the pull-out rails.

Wire rack or baking tray	Position the accessory so that its edge is behind the lug [a] on the pull-out rail. 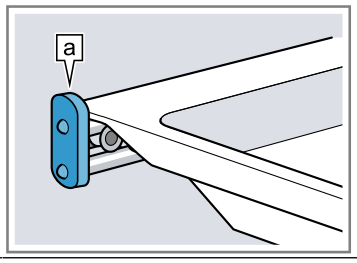

Note: Gently push the pull-out rails back into the cooking compartment.

4. Push the accessory all the way in, making sure that it does not touch the appliance door.

Note: Take any accessories that you will not be using out of the cooking compartment while the appliance is in operation.

6.4 Other accessories

You can purchase other accessories from our after-sales service, specialist retailers or online.
You will find a comprehensive range of products for your appliance in our brochures and online:
www.bosch-home.com

Accessories vary from one appliance to another. When purchasing accessories, always quote the exact product number (E no.) of your appliance.
You can find out which accessories are available for your appliance in our online shop or from our after-sales service.

7 Before using for the first time

Configure the settings for initial start-up. Clean the appliance and accessories.

7.1 Initial configuration

When the appliance is connected to the electricity supply for the first time or following a lengthy power cut, you need to configure the settings before you can use it. It may take a few seconds for the settings to appear in the display.

1. Press the text field for the required setting.
   Possible settings:
   – Language
   – Clock
2. Turn the control ring to change the setting as required.
3. Finally, press "Complete the settings" to confirm.
✔ A note appears in the display confirming that the initial configuration is complete.
✔ The time that is set appears on the display.
4. To check the appliance before heating for the first time, open and close the appliance door once.

7.2 Cleaning the appliance before using it for the first time

Clean the cooking compartment and accessories before using the appliance to prepare food for the first time.

1. Remove the product information and the accessories from the cooking compartment. Remove any leftover packaging, such as polystyrene pellets, and the adhesive tape that is in or on the appliance.
2. Wipe the smooth surfaces in the cooking compartment with a soft, damp cloth.
3. Press ⏻ to switch the appliance on.
4. Apply the following settings:

Type of heating	4D hot air
Temperature	Maximum
Cooking time	1 hour

→ *"Basic operation", Page 13*

5. Press ▷ to start.
   – Keep the kitchen ventilated while the appliance is heating.
✔ Once the time has elapsed, an audible signal sounds and the display shows the time as zero.
6. Press ⏻ to switch the appliance off.
7. Once the appliance has cooled down, clean the smooth surfaces in the cooking compartment with soapy water and a dish cloth.
8. Clean the accessories thoroughly using soapy water and a dish cloth or soft brush.

8 Basic operation

8.1 Switching on the appliance

▸ Press ⏻ to switch the appliance on.
✔ The Bosch logo appears in the display. The types of heating then appear.

8.2 Switching off the appliance

Switch your appliance off when you are not using it. The appliance will switch itself off automatically if it is not used for a certain period of time.

▸ Press ⏻ to switch the appliance off.
✔ The appliance switches off. Any functions currently in progress are cancelled.
✔ The time or residual heat indicator appears in the display.

8.3 Starting operation

You must start each operation.

ATTENTION!
If there is water on the cooking compartment floor when operating the appliance at temperatures above 120 °C, this will damage the enamel.

▸ Do not use the appliance if there is water on the cooking compartment floor.
▸ Wipe away any water on the cooking compartment floor before operation.

▸ Press ▷ to start.
✔ The settings, the running time, the display ring and the heating line appear in the display.

8.4 Pausing or cancelling operation

You can briefly pause operation and then continue. If you cancel operation completely, the settings will be reset.

1. To pause operation briefly:
   – Briefly press ▷.
   – To continue operation, press ▷.
2. To cancel operation completely, press and hold ▷ for approx. 3 seconds.
✔ Operation will stop and all the settings will be reset.

8.5 Setting the operating mode

Once you have switched on the appliance, it suggests an operating mode, e.g. types of heating.

1. If you want to use a different operating mode to the one suggested, press menu.
✔ The list of operating modes is displayed.
→ *"Operating modes", Page 10*
2. Press the operating mode that you want to use.
3. To implement other settings, press the relevant text fields.
4. Use the control ring to change the values.
5. Press ▷ to start.

8.6 Setting the type of heating and temperature

Requirement: The operating mode "Types of heating" has been selected.

1. Press the type of heating that you want to use.
   If you cannot see the type of heating in the touch displays, use the control ring to scroll though the selection list.
✔ The temperature is highlighted in white.
2. Use the control ring to set the temperature.
3. Press ▷ to start.
✔ The appliance starts heating.
✔ The target temperature, the time and how long the appliance has already been in operation are shown in the display.
4. When the food is ready, press ⏻ to switch the appliance off.

Tip: The most suitable type of heating for your food can be found in the description of the type of heating.

Note: You can also set a cooking time and end time on the appliance.
→ *"Time-setting options", Page 15*

Changing the type of heating

When you change the type of heating, the other settings will also be reset.

1. Press ▷ to pause operation.
2. Press "Types of heating".
3. Press the type of heating that you want to use.
✔ The corresponding default temperature appears in the display.

Changing the temperature

Once operation has started, you can change the temperature directly.

▸ Use the control ring to change the temperature.
✔ The temperature is applied immediately.

8.7 Displaying information

In most cases, you can call up information about the function that you have just started. The appliance displays some information, e.g. to ask you to do/confirm something or to issue a warning, automatically.

1. Press ℹ.
✔ If available, information is displayed for a few seconds.
2. Use the control ring to scroll through longer passages of text.

9 Rapid heating

To save time, you can shorten the preheating time for set temperatures of 100 °C and higher.
You can use rapid heating for the following types of heating:

- 4D hot air
- Top/bottom heating

9.1 Setting rapid heating

To ensure an even cooking result, do not place the food in the cooking compartment until rapid heating has come to an end.

Note: Do not set a cooking time until rapid heating has come to an end.

1. Set a suitable type of heating and a temperature of at least 100 °C.
2. Press "Rapid heating".
✔ The text field shows "On".
3. Press ▷ to start.
✔ Rapid heating starts.
✔ When rapid heating has come to an end, an audible signal sounds. The text field shows "Off".
4. Place the food in the cooking compartment.

Cancelling rapid heating

▸ Press "Rapid heating".
✔ The text field shows "Off".

10 Time-setting options

Your appliance has different time-setting options, with which you can control its operation.

10.1 Overview of the time-setting options

You can set a cooking time and end time for the operation. The timer can be set independently of the appliance when it is in operation.

Time-setting option	Use
Timer ⌛	The timer can be set independently of the appliance when it is in operation. It does not affect the appliance.
Cooking time ⏲	If you set a cooking time for the operation, operation of the appliance stops automatically once this time has elapsed.
End ⏲	For the cooking time, you can set the time at which operation ends. The appliance starts up automatically so that it finishes cooking at the required time.

10.2 Setting the timer

The timer runs independently of the appliance when it is in operation. The timer can be set when the appliance is switched on or off, up to 23 hours and 59 minutes. The timer has its own audible signal so that you can tell whether it is the timer or a cooking time which has elapsed.

1. Press ⌛.
✔ The symbol lights up red.
2. Use the control ring to set the timer duration.
3. Press ⌛ to start the timer.
   The timer starts automatically after a few seconds.
✔ The timer counts down.
✔ When the appliance is switched off, you will still be able to see the timer counting down in the display.
✔ When the appliance is switched on, the display shows the settings for the current operation. To display the timer for a few seconds, press ⌛.
✔ An audible signal sounds once the timer duration has elapsed. The red symbol goes out.
4. Once the timer duration has elapsed:
   – To stop the signal early, press any touch field.
   – To set another timer, press ⌛ and use the control ring to set the time.

Changing the timer

You can change the timer duration at any time.

1. Press ⌛.
2. Use the control ring to change the duration of the timer.
3. Press ⌛ to confirm.

Cancelling the timer

You can cancel the timer duration at any time.

1. Press ⌛.
2. Use the control ring to reset the duration of the timer to zero.
3. Press ⌛ to confirm.
✔ The red symbol goes out.

10.3 Setting the cooking time

You can set a cooking time for operation of up to 23 hours 59 minutes.

Requirement: An operating mode and temperature or setting have been set.

1. Press "Cooking time".
2. Use the control ring to set the cooking time.

Direction of rotation	Default value
Left	10 minutes
Right	30 minutes

   The cooking time can be set in one-minute increments up to one hour, and then in five-minute increments. The end time is calculated automatically.
3. Press ▷ to start.
✔ The appliance starts to heat and the cooking time counts down.
✔ When the time has elapsed, a signal sounds. The time shown in the display is zero.
4. When the cooking time has elapsed:
   – To stop the signal early, press any touch field.
   – To set another cooking time, press "Cooking time" and use the control ring to set the time.
   – To continue without setting a cooking time, press ▷ to start.
   – When the food is ready, press ⏻ to switch the appliance off.

Changing the cooking time

You can change the cooking time at any time.

1. Press.
2. Use the control ring to change the cooking time.
✔ The change is applied immediately.

Cancelling the cooking time

You can cancel the cooking time at any time.

1. Press "Cooking time".
2. Use the control ring to reset the cooking time to zero.
✔ The change is applied immediately.
✔ The appliance continues to operate without a cooking time.

10.4 Setting the end time

You can delay the time at which cooking is due to finish by up to 23 hours and 59 minutes.

Notes

- In order to achieve a good cooking result, do not delay the end time once the appliance is already in operation.
- Food will spoil if you leave it in the cooking compartment for too long.

Requirements

- An operating mode and temperature or setting have been set.
- A cooking time is set.

1. Press "End time".
2. Use the control ring to delay the end time.
   Once the operation has started, the end time can no longer be changed.
3. Press ▷ to start.
✔ The display shows the start time. The appliance is in standby mode.
✔ Once the start time has been reached, the appliance starts to heat up and the cooking time starts counting down.
✔ When the time has elapsed, a signal sounds. The time shown in the display is zero.
4. When the cooking time has elapsed:
   – To stop the signal early, press any touch field.
   – To set another cooking time, press "Cooking time" and use the control ring to set the time.
   – To continue without setting a cooking time, press ▷ to start.
   – When the food is ready, press ⏻ to switch the appliance off.

Cancelling the end time

You can delete the set end time and the cooking time at any time.

1. Press ▷ to pause operation.
2. To continue without setting a cooking time and end time, press ▷ to start.

11 Microwave

You can use the microwave to cook, heat up, bake or defrost food very quickly. The microwave can be used on its own or in combination with a type of heating.

11.1 Cookware and accessories with microwave

To heat food evenly and avoid damaging your appliance, it is important to only use the right cookware and accessories.
Follow the cookware manufacturer's instructions.
Unless otherwise specified, place the cookware and accessory on level 1.

Microwave-safe

Cookware and accessories	Information
Cookware made from heat-resistant, microwave-safe material: ■ Glass ■ Glass ceramic ■ Porcelain ■ Temperature-resistant plastic ■ Fully glazed ceramic without cracks	These materials allow microwaves to pass through and are not damaged.
Serving dishes	You do not need to transfer your food. **Note:** Only use cookware with decorative gold or silver trim if the manufacturer guarantees its suitability for microwave use.
Supplied wire rack	Only the wire rack that is supplied is suitable for operation solely using the microwave. **Note:** Baking trays, e.g. the universal pan or the baking tray, may create sparks and are not suitable.

Not microwave-safe

Note: Observe the specifications for preventing material damage.
→ *"Microwave", Page 7*

Cookware and accessories	Information
Metal cookware and bakeware	Microwaves cannot pass through metal. The food is barely heated or not heated at all. **Note:** Metal may create sparks in pure microwave operation.

Cookware and accessories with MicroCombi
By combining the microwave and a type of heating, metal cookware and accessories are also possible.

Cookware and accessories	Information
Metal cookware and bakeware	Metal can be used with MicroCombi. **Note:** Metal must be kept at least 2 cm from the cooking compartment walls and the inside of the door.
Accessories supplied: ■ Wire rack ■ Universal pan	The supplied accessory is suitable for MicroCombi. No sparks are created.

Testing cookware for microwave suitability

If you are unsure whether your cookware is suitable for use in the microwave, carry out a cookware test.

ATTENTION!
Operating the appliance without food in the cooking compartment may lead to overloading.
- Do not switch on the microwave unless there is food inside. The only exception to this rule is when performing a short cookware test.

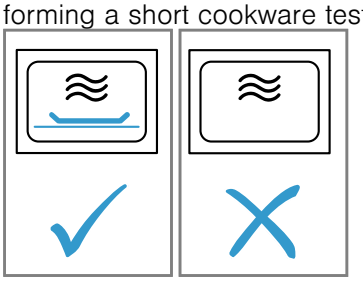

⚠ **WARNING – Risk of burns!**
The accessible parts of the appliance become hot during operation.
- Never touch these hot parts.
- Keep children at a safe distance.

1. Place the empty cookware in the cooking compartment.
2. Set the appliance to run for 30 seconds to 1 minute at maximum power.
3. Start the operation.
4. Check the cookware several times:
   - If the cookware remains cold or warm to the touch, it is suitable for microwave use.
   - If the cookware becomes hot or sparks are created, stop the cookware test. The cookware is not microwave-safe.

11.2 Configuring the microwave settings

Notes
- Note the correct way to handle the microwave:
  - → *"Safety", Page 2*
  - → *"Preventing material damage", Page 6*
  - → *"Microwave power settings", Page 11*
  - → *"Cookware and accessories with microwave", Page 16*
- To prevent condensation, the appliance automatically switches on a heating element at the maximum microwave power settings of 600 watts and max. The cooking compartment and the accessories become hot. The cooking result is not affected by this. You can switch off this drying function in the basic settings.
  → *"Basic settings", Page 20*

⚠ **WARNING – Risk of burns!**
At the highest settings in microwave only mode, the drying function will automatically switch on an additional heating element to heat the cooking compartment.
- Never touch the inside surfaces of the cooking compartment or the heating elements while they are hot.
- Keep children at a safe distance.

1. Press menu.
2. Press "Microwave".
3. Press the button for the microwave power setting that you require.
4. Use the control ring to set the cooking time.
5. Press ▷ to start.

✔ The microwave starts and the cooking time counts down. The heating line does not appear.
✔ When the time has elapsed, a signal sounds. The time shown in the display is zero.

6. When the cooking time has elapsed:
   - To stop the signal early, press any touch field.
   - If necessary, set a microwave power setting and a cooking time again.
   - When the food is ready, press ⏻ to switch the appliance off.
7. If you have switched off the drying function for the microwave in the basic settings, dry the cooking compartment.
   → *"Drying", Page 23*

Note: If you open the appliance door during operation, the operation stops. When you close the appliance door, you have to press ▷ to continue. If you have changed the basic setting, make sure that the microwave does not resume operation without food inside.
→ *"Basic settings", Page 20*

Changing the microwave power setting
If you change the microwave power setting, the set cooking time set is retained.
1. Press ▷ to pause operation.
2. Press the button for the microwave power setting that you require.
3. Press ▷ to continue operation.

Changing the cooking time
After the start of the microwave operation, you can change the cooking time directly.
- Use the control ring to change the cooking time.
✔ The change is applied immediately.

11.3 MicroCombi

To reduce the cooking time, you can use some types of heating in combination with microwave mode.
Possible types of heating are:
- 4D hot air
- Top/bottom heating
- Circulated air grilling
- Grill, large area
- Grill, small area

Possible microwave power settings are:
- 90 watts
- 180 watts
- 360 watts

Setting MicroCombi
Note:
Note the correct way to handle the microwave:
- → *"Safety", Page 2*
- → *"Preventing material damage", Page 6*
- → *"Microwave power settings", Page 11*
- → *"Cookware and accessories with microwave", Page 16*

1. Press menu.
2. Press "MicroCombi".
3. Press the type of heating that you want to use.
4. Press the button for the microwave power setting that you require.
5. Use the control ring to set the temperature.

6. Press the cooking time and use the control ring to set the cooking time.
7. Press ▷ to start.
✔ The appliance starts to heat and the cooking time counts down.
✔ When the time has elapsed, a signal sounds. The time shown in the display is zero.
8. When the cooking time has elapsed:
   – To stop the signal early, press any touch field.
   – If necessary, set a combination again.
   – When the food is ready, press ⏻ to switch the appliance off.

Changing the temperature

Once the MicroCombi operation has started, you can change the temperature directly.

▸ Use the control ring to change the temperature.
✔ The change is applied immediately.

Changing the cooking time

After the start of the MicroCombi operation, you can change the cooking time at any time.

1. Press "Cooking time".
2. Use the control ring to change the cooking time.
✔ The change is applied immediately.

Changing the combination

If you change the combination of the type of heating and the microwave power setting, all of the other settings are reset.

1. Press ▷ to pause operation.
2. Change the type of heating or microwave power setting.
   – To change the microwave power setting, press on the microwave and change the microwave power setting.
   – To change the type of heating, press on the type of heating and change the type of heating. Then set the microwave power setting.
3. Press ▷ to continue operation.

12 Assist

The "Assist" operating mode helps you to use your appliance to prepare different dishes by selecting the optimum settings automatically.

12.1 Cookware

The cooking result depends on the composition of the meat and the size of cookware.
You should therefore use heat-resistant cookware that is suitable for temperatures up to 300 °C. Glass or glass ceramic cookware is best. The joint should cover approx. two thirds of the cookware base.
Cookware made from the following material is not suitable:

- Bright, shiny aluminium
- Unglazed clay
- Plastic or plastic handles

Note: For some dishes, the appliance switches on the microwave. A notification appears in the display stating that you should use cookware that is suitable for microwave use.
→ *"Cookware and accessories with microwave", Page 16*

12.2 Settings for the dishes

To make the dishes perfectly, the appliance uses different settings.

Note: The cooking result depends on the quality and composition of the food. Use fresh and, ideally, chilled food. Use frozen food straight from the freezer.

Tips and information about the settings

If you set a dish, the display shows relevant information for this dish, e.g.:

- Suitable shelf position
- Suitable accessory or cookware
- Added liquid
- Time for turning or stirring
  When this time is reached, a signal sounds.

To call up the information, press "Tip" or ℹ. Some notes are displayed automatically.

Programmes

The ideal type of heating, temperature and cooking time are preset for programmes.
In order to obtain an optimal cooking result, you must also set the weight. Unless otherwise indicated, set the total weight for your dish. You can set the weight only in the intended range.

Recommended settings

For the recommended settings, the optimum type of heating is preset. The display shows the type of heating.
You can adjust the preset temperature and the cooking time.

Microwave dishes

The appliance activates the microwave automatically for certain dishes. This significantly reduces the cooking time.
Take note of the information for the microwave.
→ *"Microwave", Page 16*

12.3 Overview of the dishes

You can find out which individual dishes are available to you on the appliance when you call up the operating mode.
The dishes are sorted by categories and food.

Category	Foods
Cakes	Cakes in tins Cakes on a baking tray Small baked items Biscuits
Bread, bread rolls	Bread Bread rolls

Category	Foods
Pizza, savoury cakes	Pizza Savoury cakes, quiche
Bakes, soufflés	Bake, savoury, fresh, cooked ingredients Fresh lasagne Potato gratin, raw ingredients, flat Bake, sweet, fresh Soufflés in individual moulds
Frozen products	Pizza Bread rolls Bakes Potato products Poultry, fish
Poultry	Chicken Duck, goose Turkey
Meat	Pork Beef Veal Lamb Game Meat dishes
Fish.	Fish
Side dishes, vegetables	Vegetables Potatoes Rice Cereals
Defrosting food	Bread, bread rolls Cakes Meat, poultry Fish

12.4 Adjusting the dish

Your appliance offers you a wide range of different dishes. You can use the control ring to scroll through the various selection lists.

Note: Once it has started, you can no longer change or interrupt the dish and the settings.

Requirement: To start the operation, the cooking compartment must be cooled down.

1. Press menu.
2. Press "Assist".
3. Press the required category.
4. Press the required food.
5. Press the required meal.
✔ The settings for the dish appear in the display.
6. Adjust the settings, if required.
   – For some dishes, you can adjust the temperature and the cooking time, and for some dishes you can adjust the weight instead.
   – For some dishes, you can also delay the end time.
   → *"Setting the end time", Page 15*
7. In order to get information about the accessory and shelf position, press "Tip".
8. Press ▷ to start.
✔ The appliance starts to heat and the cooking time counts down.
✔ Once the dish is ready, a signal sounds. The appliance stops heating.
9. When the cooking time has elapsed:
   – To stop the signal early, press any touch field.
   – For some dishes, you can continue cooking if necessary.
   → *"Adding extra cooking time", Page 19*
   – When the dish is ready, press ⏻ to switch the appliance off.

Adding extra cooking time

For some dishes, the appliance offers the option to add extra cooking time once the cooking time has elapsed. You can do this as often as required.

1. If you do not want to continue cooking, press "End" and switch off the appliance using ⏻.
2. To continue cooking the dish, press "Continue cooking".
✔ A cooking time appears in the display.
3. Use the control ring to change the cooking time, if required.
4. Press ▷ to start.
✔ The appliance starts to heat and the cooking time counts down.
✔ When the time has elapsed, a signal sounds. The appliance stops heating. The notification to continue cooking appears again.
5. When the cooking time has elapsed:
   – To stop the signal early, press any touch field.
   – If you want to continue cooking again, press "Continue cooking".
   – When the dish is ready, press "End" and use ⏻ to switch the appliance off.

13 Childproof lock

You can secure your appliance to prevent children from accidentally switching it on or changing the settings.

13.1 Activating and deactivating the childproof lock

You can activate and deactivate the childproof lock regardless of whether the appliance is switched on or off.

1. Press and hold ⚿ for approx. 4 seconds to activate the childproof lock.
✔ A confirmation note appears on the display.
✔ The control panel is locked. The appliance can only be switched off using ⏻.
✔ When the appliance is on, ⚿ lights up. When the appliance is off, ⚿ does not light up.
2. Press and hold ⚿ for approx. 4 seconds to deactivate the childproof lock.
✔ A confirmation note appears on the display.

14 Sabbath mode

You can set a cooking time of up to 74 hours using Sabbath mode. You can use top/bottom heating to keep food warm between 85 °C and 140 °C during this time without having to switch the appliance on or off.

14.1 Starting Sabbath mode

Notes

- If you open the appliance door during operation, the appliance stops heating. When you close the appliance door, the appliance continues to heat again.
- Once it has started, you can no longer change or interrupt Sabbath mode.

Requirements

- Sabbath mode is activated in the basic settings.
  → *"Basic settings", Page 20*
- The operating mode "Types of heating" ⊟ has been selected.

1. Press "Sabbath mode".
   If you cannot see the type of heating in the touch displays, use the control ring to scroll though the selection list.
   ✔ The temperature is highlighted in white.
2. Use the control ring to set the temperature.
3. Press "Cooking time".
4. Use the control ring to set the cooking time.
   The end time cannot be delayed.
5. Press ▷ to start the operation.
   ✔ The appliance starts to heat and the time starts to count down.
6. Once the cooking time has elapsed, an audible signal sounds. The cooking time is at zero. The appliance stops heating up and responds again as usual outside of Sabbath mode.
   – Press ⏻ to switch the appliance off.
   The appliance automatically switches off after approx. 10 to 20 minutes.

15 Basic settings

You can configure the appliance to meet your needs.

15.1 Overview of the basic settings

Here you can find an overview of the basic settings and factory settings. The basic settings depend on the features of your appliance.

Basic setting	Selection
Language	See selection on the appliance.
Clock	Clock in 24-hour format.
Factory setting	Reset Do not reset[1]
Audible signal	Short duration (30 seconds) Medium duration (1 minute)[1] Long duration (5 minutes)
Volume	5 settings
Button tone	Switched on Switched off (tone remains for ⏻)[1]
Display brightness	5 settings
Clock display	Off Digital[1] Analogue
Lighting	Off during operation On during operation[1]
Automatic continue (only applicable for the Microwave operating mode)	Do not resume microwave automatically[1] When closing the door
Operation after switch-on	Main menu Types of heating[1] Microwave MicroCombi Assist
Warning: Baking tray in microwave	Display[1] Do not display
Night-time dimming	Switched off[1] Switched on
Brand logo	Display[1] Do not display
Dry microwave	Switched on[1] Switched off
Fan run-on time	Recommended[1] Minimum
Sabbath mode	Switched on Switched off[1]

[1] Factory setting (may vary according to model)

15.2 Changing the basic settings

Requirement: The appliance is switched on.

1. Press menu.
2. Press "Basic settings".
3. Press the required basic setting and use the control ring to change it.
   The red bar next to the text field identifies the basic setting that is currently selected. Its corresponding value is shown in the display.
4. Use "Further settings" to scroll through the basic settings and, if required, use the control ring to change any of these settings.
5. To save your changes, press menu and use "Save" to confirm.

Note: Your changes to the basic settings will be retained even after a power failure.

Discarding changes to the basic settings

- ▸ Press menu and use "Do not save" to confirm.
- ✔ All changes will be discarded and not saved.

15.3 Setting the time

Requirement: The appliance is switched on.

1. Press menu.
2. Press "Basic settings".
3. Press "Time".
4. Use the control ring to change the time.
5. To save your changes, press menu and use "Save" to confirm.

16 Cleaning and servicing

To keep your appliance working efficiently for a long time, it is important to clean and maintain it carefully.

16.1 Cleaning products

In order to avoid damaging the various oven surfaces on the appliance, do not use unsuitable cleaning products.

⚠ **WARNING – Risk of electric shock!**

An ingress of moisture can cause an electric shock.

- Do not use steam- or high-pressure cleaners to clean the appliance.

ATTENTION!

Unsuitable cleaning products may damage the surfaces of the appliance.

- Do not use harsh or abrasive cleaning products.
- Do not use cleaning products with a high alcohol content.
- Do not use hard scouring pads or cleaning sponges.
- Do not use any special cleaners for cleaning the appliance while it is hot.

Using oven cleaner in a hot cooking compartment damages the enamel.

- Never use oven cleaner in the cooking compartment when it is still warm.
- Remove all food remnants from the cooking compartment and the appliance door before you next heat up the appliance.

New sponge cloths contain residues from production.

- Wash new sponge cloths thoroughly before use.

Suitable cleaning agents

Only use cleaning agents that are suitable for the different surfaces on your appliance.

Follow the instructions on cleaning the appliance.
→ *"Cleaning the appliance", Page 22*

Appliance front

Surface	Suitable cleaning agents	Information
Stainless steel	■ Hot soapy water ■ Special stainless steel cleaning products suitable for hot surfaces	To prevent corrosion, remove any limescale, grease, starch or albumin (e.g. egg white) stains on stainless steel fronts immediately. Apply a thin layer of the stainless steel cleaning product with a soft cloth.
Plastic or painted surfaces E.g. control panel	■ Hot soapy water	Do not use glass cleaner or a glass scraper. To avoid permanent stains, remove any descaling agent that gets onto the surface immediately.

Appliance door

Area	Suitable cleaning agents	Information
Door panels	■ Hot soapy water	Do not use a glass scraper or a stainless steel wool. **Tip:** Remove the door panels in order to clean them thoroughly. → *"Appliance door", Page 25*
Door cover	■ Made of stainless steel: Stainless steel cleaner ■ Made of plastic: Hot soapy water	Do not use glass cleaner or a glass scraper. Do not use stainless steel care products. **Tip:** Remove the door cover for thorough cleaning. → *"Appliance door", Page 25*
Stainless steel interior door frame	Stainless steel cleaner	Discolouration can be removed using stainless steel cleaner. Do not use stainless steel care products.
Door handle	■ Hot soapy water	To avoid permanent stains, remove any descaling agent that gets onto the surface immediately.
Door seal	■ Hot soapy water	Do not remove or scrub.

Cooking compartment

Area	Suitable cleaning agents	Information
Enamel surfaces	■ Hot soapy water ■ Vinegar water ■ Oven cleaner	Soak any heavily soiled areas and use a brush or steel wool. Leave the appliance door open to dry the cooking compartment after cleaning it. **Notes** ■ Enamel burns at very high temperatures, causing minor discolouration. The functionality of your appliance is not affected by this. ■ The edges of thin trays cannot be completely enamelled and may be rough. This does not impair corrosion protection. ■ Food residues will leave a white coating on the enamel surfaces. The coating does not pose a health risk. The functionality of your appliance is not affected by this. You can remove residues with lemon juice.
Self-cleaning surfaces	-	Follow the instructions for self-cleaning surfaces. → *"Cleaning self-cleaning surfaces in the cooking compartment", Page 22*
Glass cover for the oven light	■ Hot soapy water	Use oven cleaner to remove very heavy soiling.
Rails	■ Hot soapy water	Soak any heavily soiled areas and use a brush or steel wool. **Note:** To clean thoroughly, detach the rails. → *"Rails", Page 24*
Pull-out system	■ Hot soapy water	Use a brush to remove very heavy soiling. Clean the pull-out rails while they are pushed in so that you do not remove the lubricant. Do not clean in the dishwasher. **Note:** To clean thoroughly, detach the pull-out system. → *"Rails", Page 24*
Accessories	■ Hot soapy water ■ Oven cleaner	Soak any heavily soiled areas and use a brush or steel wool. Enamelled accessories are dishwasher-safe.

16.2 Cleaning the appliance

In order to avoid damaging the appliance, you must clean your appliance only as specified, and with suitable cleaning products.

⚠ **WARNING – Risk of burns!**

The appliance and its parts that can be touched become hot during use.

- ▸ Caution should be exercised here in order to avoid touching heating elements.
- ▸ Young children under 8 years of age must be kept away from the appliance.

⚠ **WARNING – Risk of fire!**

Loose food remnants, fat and meat juices may catch fire.

- ▸ Before using the appliance, remove the worst of the food residues and remnants from the cooking compartment, heating elements and accessories.

Requirement: Read the information on cleaning products.
→ *"Cleaning products", Page 21*

1. Clean the appliance using hot soapy water and a dish cloth.
   – For some surfaces, you can use alternative cleaning agents.
   → *"Suitable cleaning agents", Page 21*
2. Dry with a soft cloth.

16.3 Cleaning self-cleaning surfaces in the cooking compartment

The back panel in the cooking compartment is self-cleaning. The self-cleaning surfaces are coated with a porous, matte ceramic layer and have a coarse surface. When the appliance is in operation, the self-cleaning surfaces absorb splashes from baking, roasting or grilling and break them down. If the self-cleaning surfaces no longer clean themselves adequately during operation, heat up the cooking compartment specifically to the right temperature.

ATTENTION!

If you do not clean the self-cleaning surfaces regularly, they may become damaged.

- ▸ If dark stains are visible on the self-cleaning surfaces, heat up the cooking compartment.
- ▸ Do not use oven cleaner or abrasive cleaning aids. If oven cleaner accidentally comes into contact with the self-cleaning surfaces, dab it off immediately using water and a sponge cloth. Do not rub.

1. Remove accessories and cookware from the cooking compartment.
2. Detach the shelf supports and remove them from the cooking compartment.
   → *"Rails", Page 24*
3. Remove coarse dirt using soapy water and a soft cloth:
   – From the smooth enamel surfaces
   – From the inside of the appliance door

– From the glass cover on the oven light
This prevents stains that cannot be removed.
4. Remove any objects from the cooking compartment. The cooking compartment must be empty.
5. Set the 4D hot air type of heating.
6. Set the maximum temperature.
7. Start the operation.
8. Switch off the appliance after one hour.
9. Once the appliance has cooled down, wipe the cooking compartment with a damp cloth.
Note: Marks may appear on the self-cleaning surfaces. Residues of sugar and egg white in the food are not removed and stick to the surfaces. Red stains are residues from salty food – they are not rust. The stains are not hazardous to health. These marks do not impair the cleaning ability of the self-cleaning surfaces.
10. Attach the shelf supports.
→ *"Rails", Page 24*

17 Cleaning assistance

The cleaning assistance is a quick alternative for occasionally cleaning the cooking compartment. The cleaning assistance softens dirt by vaporising the soapy water. It is then easier to remove dirt.

17.1 Setting the cleaning assistance

⚠ **WARNING – Risk of scalding!**
If there is water in the cooking compartment when it is hot, this may create hot steam.
- Never pour water into the cooking compartment when the cooking compartment is hot.

Requirement: The cooking compartment has cooled down completely.
1. Remove the accessories from the cooking compartment.
2. Mix 0.4 litres water with a drop of washing-up liquid and pour into the centre of the cooking compartment floor.
Do not use distilled water.
3. Select the "Types of heating" operating mode.
4. Set the bottom heating ⊟ type of heating.
5. Use the control ring to set the temperature to 80 °C.
6. Press "Cooking time".
7. Use the control ring to set the cooking time to four minutes.
8. Press ▷ to start.
✔ The appliance starts to heat and the cooking time counts down.
✔ When the time has elapsed, a signal sounds. The time shown in the display is zero.
9. Use ⏻ to switch the appliance off and leave the cooking compartment to cool for approx. 20 minutes.

17.2 Wiping down the cooking compartment

ATTENTION!
The prolonged presence of moisture in the cooking compartment leads to corrosion.
- After using the cleaning assistance, wipe the cooking compartment and allow it to dry completely.

Requirement: The cooking compartment must have cooled down.
1. Open the appliance door and remove the remaining water with an absorbent sponge cloth.
2. Clean the smooth surfaces in the cooking compartment with a dish cloth or a soft brush. Remove stubborn food remnants using a stainless steel scouring pad.
3. Remove limescale with a cloth soaked in vinegar. Then wipe with clean water and rub dry with a soft cloth (including under the door seal).
4. In order to dry the cooking compartment, leave the appliance door open in the detent position (approx. 30°) for approx. one hour.

18 Drying

To prevent residual moisture, dry the cooking compartment following operation.
ATTENTION!
If there is water on the cooking compartment floor when operating the appliance at temperatures above 120 °C, this will damage the enamel.
- Do not use the appliance if there is water on the cooking compartment floor.
- Wipe away any water on the cooking compartment floor before operation.

18.1 Drying the cooking compartment

You can dry the cooking compartment by hand or use the "Drying" function.
1. Allow the appliance to cool down.
2. Remove dirt from the cooking compartment.
3. Wipe away the water in the cooking compartment.
4. Dry the cooking compartment.
– Leave the cooking compartment to dry with the appliance door open for 1 hour.
– To use the "Drying" function, set "Drying".
→ *"Setting the drying process", Page 23*

Setting the drying process

Requirement: → *"Drying the cooking compartment", Page 23*
1. Press menu.
2. Press "Drying".
✔ The duration appears in the display. The duration cannot be changed.
3. Press ▷ to start.
✔ The drying process starts and the duration counts down.

✔ Once the drying process has ended, an audible signal sounds and the display shows the cooking time as zero.

4. Press ① to switch the appliance off.
5. To dry the cooking compartment completely, leave the appliance door open for 1 to 2 minutes.

19 Rails

To thoroughly clean the rails and the cooking compartment, or to replace the rails, you can remove the rails.

19.1 Detaching the rails

⚠ **WARNING – Risk of burns!**
The shelf supports get very hot
- Never touch the shelf supports when hot.
- Always allow the appliance to cool down.
- Keep children at a safe distance.

1. Pull out the pull-out forwards.
2. Lift the rail forwards slightly ① and detach it ②.
3. Swivel the entire rail outwards ③ and unhook it at the rear ④.

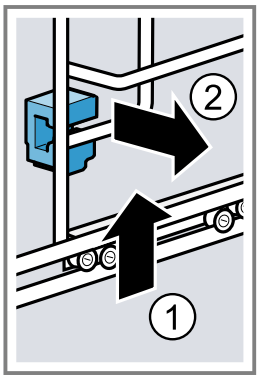

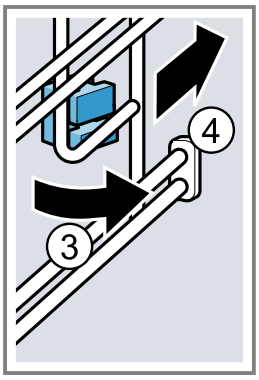

19.2 Fitting the retainers

The retainers may fall out when you detach the rails.
Note:
The retainers at the front differ from those at the rear.

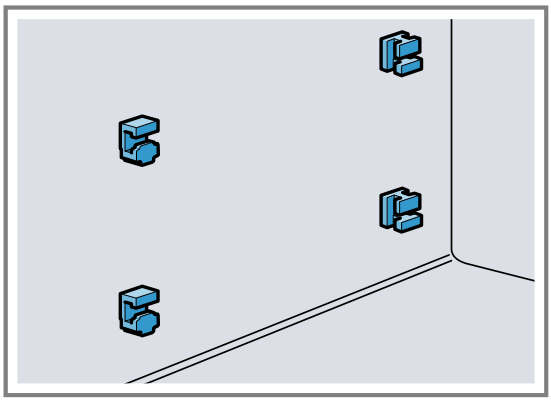

1. Hook the front retainers with the hook into the round hole at the top and set them at a slight angle ①.
2. Hook the front retainers in at the bottom and straighten them ②.

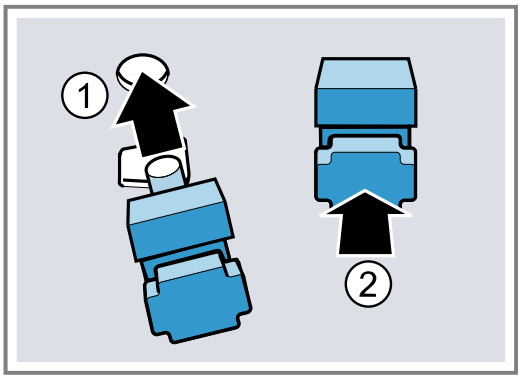

3. Hook the rear retainers with the hook into the top hole ① and push them into the bottom hole ②.

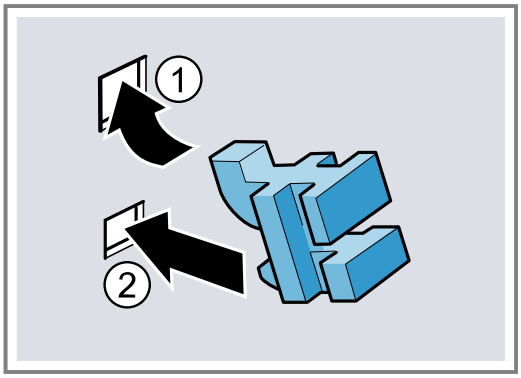

19.3 Attaching the rails

Notes
- When hanging the rails, ensure that the pull-out is at the bottom.
- The rails only fit on the right or left.
- For both pull-out rails, ensure that you can pull them forwards and out.

1. Set the rear rail at an angle, hooking it into the retainers at the top and bottom ①.
2. Pull the rail forwards ②.
3. Hook in the rail at the front ③ and press it down ④.

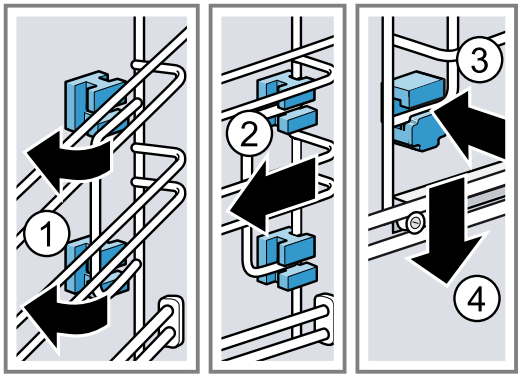

4. Push the pull-outs in completely.

20 Appliance door

To clean the appliance door thoroughly, you can disassemble the appliance door.

20.1 Removing the door cover

The stainless steel inlay in the door cover may discolour. Remove the door cover in order to clean it and the stainless steel inlay, or to remove the door panes.

1. Open the appliance door slightly.
2. Press down on the left- and right-hand sides of the door cover.
3. Remove the door cover and carefully close the appliance door.

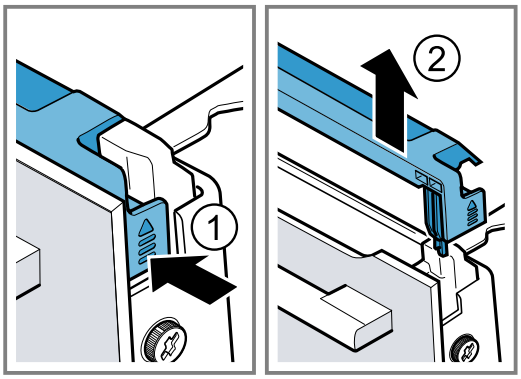

20.2 Removing the door panes

⚠ **WARNING – Risk of injury!**
Scratched glass in the appliance door may develop into a crack.
- Do not use any harsh or abrasive cleaners or sharp metal scrapers to clean the glass on the oven door, as they may scratch the surface.

The hinges on the appliance door move when the door is opened and closed, which could trap your fingers.
- Keep your hands away from the hinges.

Components inside the appliance door may have sharp edges.
- Wear protective gloves.

Requirement: The door cover has been removed.

1. Undo and remove the screws on the left and right of the appliance door.
2. Place a folded-up tea towel in the appliance door.

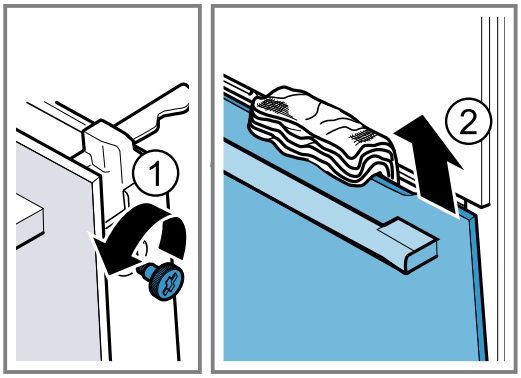

3. Close the appliance door.
4. Pull the front pane up and out.
5. Place the front pane down on a flat surface with the door handle facing down.
6. ⚠ **WARNING – Risk of serious harm to health!**
   If the screws are undone, the safety of the appliance can no longer be guaranteed. Microwave energy may escape.
   - Never undo the screws.

   Never unscrew the four black screws on the frame.

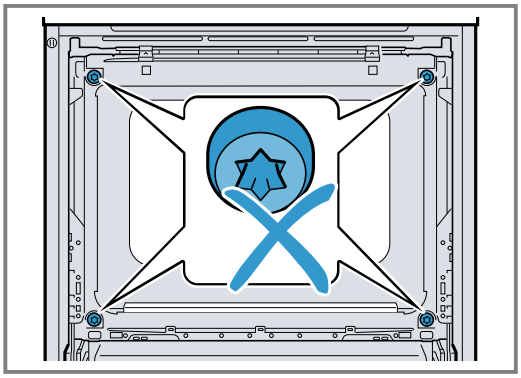

20.3 Fitting the door panes

⚠ **WARNING – Risk of injury!**
The hinges on the appliance door move when the door is opened and closed, which could trap your fingers.
- Keep your hands away from the hinges.

Components inside the appliance door may have sharp edges.
- Wear protective gloves.

1. Attach the front pane downwards into the left- and right-hand retainers [a] ①.
2. Push the front pane to the appliance until the left- and right-hand hook [a] is opposite the support [b] ②.

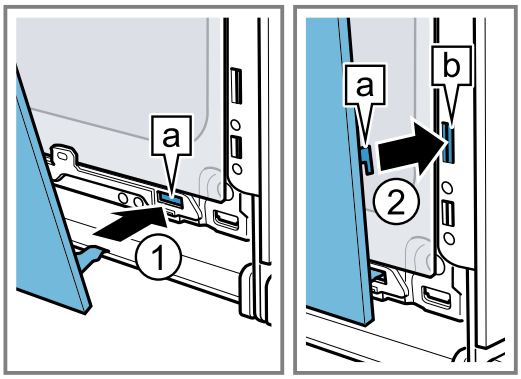

3. Push the front pane in at the bottom ① until you hear it click into place.
4. Open the appliance door slightly and remove the tea towel.
5. Screw both screws back in on the left and right of the appliance door.

6. Put the door cover in position and push down on it ② until you hear it click into place.

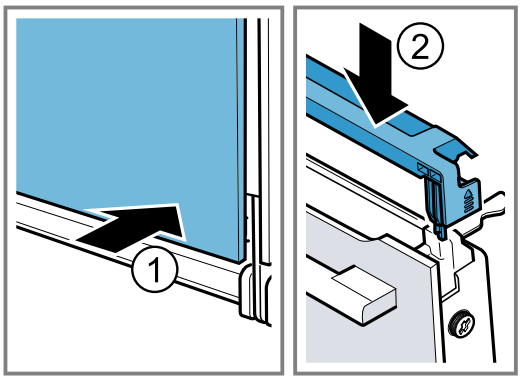

7. Close the appliance door.

Note: Do not use the cooking compartment again until the door panes have been correctly fitted.

21 Troubleshooting

You can rectify minor faults on your appliance yourself. Read the troubleshooting information before contacting after-sales service. This will avoid unnecessary costs.

⚠ **WARNING – Risk of injury!**

Improper repairs are dangerous.

- Repairs to the appliance should only be carried out by trained specialist staff.
- If the appliance is defective, call Customer Service.

⚠ **WARNING – Risk of electric shock!**

Incorrect repairs are dangerous.

- Repairs to the appliance should only be carried out by trained specialist staff.
- Only use genuine spare parts when repairing the appliance.
- If the power cord of this appliance is damaged, it must be replaced by the manufacturer, the manufacturer's Customer Service or a similarly qualified person in order to prevent any risk.

21.1 Malfunctions

Fault	Cause and troubleshooting
The appliance is not working.	The circuit breaker is faulty. ▸ Check the circuit breaker in the fuse box.
	There has been a power cut. ▸ Check whether the lighting in your kitchen or other appliances are working.
	Electronics fault **1.** Briefly disconnect the appliance from the power supply by switching off the fuse. **2.** Reset the basic settings to the factory settings. → *"Basic settings", Page 20*
"Sprache Deutsch" appears in the display.	There has been a power cut. ▸ Implement the settings for the initial configuration. – Language – Clock
The operation does not start or is interrupted.	Different causes are possible. ▸ Check any notifications that appear in the display. → *"Displaying information", Page 14*
	Malfunction ▸ Call the after-sales service. → *"Customer Service", Page 28*
Appliance does not heat up.	Demo mode is activated in the basic settings; ⊘ appears in the display. **1.** Briefly disconnect the appliance from the power supply by switching the circuit breaker in the fuse box off and back on again. **2.** Deactivate demo mode within three minutes in the → *"Basic settings", Page 20.*
	There has been a power cut. ▸ Open and close the appliance door once after a power failure. ✔ The appliance is checked and is ready to use.

Fault	Cause and troubleshooting
The time is not displayed when the appliance is switched off.	Basic setting has been changed. ▸ Change the basic setting for the time display. → *"Basic settings", Page 20*
The control ring has fallen out of the mount in the control panel.	The control ring has been detached. **1.** Insert the control ring into the mount in the control panel. **2.** Push the control ring into the mount so that it clicks into place and can be turned.
The control ring is difficult to turn.	There is dirt below the control ring. The control ring can be removed. **Note:** To ensure that the mount remains stable, do not remove the control ring too often. **1.** To loosen the control ring, press on the outer edge of the control ring. ✔ The control ring tilts and is easier to grip. **2.** Remove the control ring from the mount. **3.** Clean the control ring and its mount on the appliance carefully using soapy water and a dish cloth. Dry with a soft cloth. Do not use any harsh or abrasive cleaning agents. Do not soak the control ring. Do not clean the control ring in the dishwasher.
During simple microwave operation, the cooking compartment becomes hot.	The drying function is switched on. To prevent condensation during simple microwave operation, the appliance automatically switches on the top heating for levels 600 W and max. The cooking result is not affected by this. ▸ You can change the basic setting for the drying function during microwave operation. → *"Basic settings", Page 20* – Take note of the information for the microwave. → *"Microwave", Page 16*
The interior lighting does not work.	The LED light is defective. **Note:** Do not remove the glass cover. ▸ Call the after-sales service. → *"Customer Service", Page 28*
Maximum operating time reached.	To prevent an unwanted permanent operation, the appliance automatically stops heating after several hours if the settings are unchanged. A message appears in the display. The point at which the maximum operating time is reached is determined by the corresponding settings for an operating mode. **1.** To continue the operation, press any touch field and turn the control ring. **2.** If you do not need to use the appliance, use ⏻ to switch it off. **Tip:** To prevent the appliance from switching off when you do not want it to, set a cooking time. → *"Setting the cooking time", Page 15*
A message with "D" or "E" appears in the display, e.g. D0111 or E0111.	The electronics have detected a fault. **1.** Switch the appliance off and on again. ✔ If the fault was a one-off, the message disappears. **2.** If the message appears again, call the after-sales service. Please specify the exact error message when calling. → *"Customer Service", Page 28*
The cooking result is not satisfactory.	Settings were unsuitable. Setting values, e.g. temperature or cooking time, depend on the recipe, quantity and food. ▸ Next time, set lower or higher values. **Tip:** A lot of information about the food preparation and corresponding setting values can be found on our website www.bosch-home.com.

22 Disposal

22.1 Disposing of old appliance

Valuable raw materials can be reused by recycling.

1. Unplug the appliance from the mains.

2. Cut through the power cord.

3. Dispose of the appliance in an environmentally friendly manner.

Information about current disposal methods are available from your specialist dealer or local authority.

This appliance is labelled in accordance with European Directive 2012/19/EU concerning used electrical and electronic appliances (waste electrical and electronic equipment - WEEE).
The guideline determines the framework for the return and recycling of used appliances as applicable throughout the EU.

23 Customer Service

Detailed information on the warranty period and terms of warranty in your country is available from our after-sales service, your retailer or on our website.
If you contact Customer Service, you will require the product number (E-Nr.) and the production number (FD) of your appliance.
The contact details for Customer Service can be found in the enclosed Customer Service directory or on our website.
This product contains light sources from energy efficiency class G. These light sources are available as a spare part and should only be replaced by trained specialist staff.

23.1 Product number (E-Nr.) and production number (FD)

You can find the product number (E-Nr.) and the production number (FD) on the appliance's rating plate. You will see the rating plate with these numbers if you open the appliance door.

Make a note of your appliance's details and the Customer Service telephone number to find them again quickly.

24 How it works

Here, you can find the ideal settings for various types of food as well as the best accessories and cookware. We have perfectly tailored these recommendations to your appliance.

24.1 General cooking tips

Please take note of the following information when cooking all types of food.

- The temperature and cooking time depend on the amount of food and the recipe. Settings ranges are specified for this reason. Try using the lower values to start with.
- The setting values apply to food placed in the cooking compartment while the cooking compartment is still cold. Do not place accessories into the cooking compartment until it has finished preheating.
- Remove any accessories that are not being used from the cooking compartment.

24.2 Baking tips

- Dark-coloured metal baking tins are most suitable for baking cakes, bread and other baked goods.
- Use wide, shallow cookware for bakes and gratins. Food takes longer to cook in deep, narrow cookware and it browns more on top.
- If you are cooking bakes directly in the universal pan, place the universal pan into the cooking compartment at level 1.
- The setting values for bread dough apply to both dough placed on a baking tray and dough placed in a loaf tin.

ATTENTION!
When the cooking compartment is hot, any water inside it will create steam. The change in temperature may cause damage.

- ▸ Never pour water into the cooking compartment when it is still hot.
- ▸ Never place cookware containing water on the cooking compartment floor.

Shelf positions

If you bake on one level, use shelf position 1.

Baking on 2 levels	Shelf position
Universal pan Baking tray	3 1
Baking tins on two wire racks	3 1

Use the 4D hot air heating function.

Notes

- Items that are placed in the appliance on baking trays or in baking tins/dishes at the same time will not necessarily be ready at the same time.
- If you opt for cooking in combination with the microwave mode, you can only cook on one level.

24.3 Roasting, braising and grilling tips

- The recommended settings are for fridge-temperature food and unstuffed, oven-ready poultry.

- Place the poultry onto the cookware breast-side or skin-side down.
- Turn roasting joints, grilled items or whole fish after approx. ½ to ⅔ of the specified time.

Roasting on the wire rack

Food roasted on the wire rack will become very crispy on all sides. You can roast large poultry, for example, or multiple individual pieces at the same time.

- Roast pieces of a similar weight and thickness. The grilled food will brown evenly and will remain succulent and juicy.
- Place the food to be roasted directly on the wire rack.
- To catch any liquids that drip down, place the universal pan into the cooking compartment one level below the wire rack.
- Add up to ½ litre of water to the universal pan, depending on the size and type of food that you want to roast.
  You can make a sauce from the juices that are collected. This also means that less smoke is produced and the cooking compartment does not become as dirty.

Roasting in cookware

If you cover the cookware when you cook your food, this will keep the cooking compartment cleaner.

General information about roasting in cookware

- Use heat-resistant, ovenproof cookware.
- Place the cookware on the wire rack.
- Glass cookware is best.
- Follow the manufacturer's instructions for your roasting dishes.

Roasting in uncovered cookware

- Use a deep roasting dish.
- If you do not have any suitable cookware, you can use the universal pan.

Roasting in covered cookware

- Use a suitable lid that seals well.
- When roasting meat, there should be at least 3 cm between the food and the lid. The meat may expand.

⚠ **WARNING – Risk of scalding!**

Very hot steam may escape when the lid is opened after cooking. Steam may not be visible, depending on the temperature.

- ▸ Lift the lid in such a way that the hot steam can escape away from you.
- ▸ Keep children away from the appliance.

Grilling

Grill food if you want it to be crispy.

ATTENTION!

Acidic food may damage the grid

- ▸ Do not place acidic food, such as fruit or food with an acidic marinade directly on the pan support.

- When grilling several food items, choose pieces that are of a similar weight and thickness. The grilled food will brown evenly and will remain succulent and juicy.
- Place the food to be grilled directly onto the wire rack.
- To catch any liquids that drip down, place the universal pan into the cooking compartment at least one level below the wire rack.

Notes

- The grill element switches on and off continuously. This is normal. The grill setting that you use determines how frequently this occurs.
- Smoke may be produced when grilling.

Information for those allergic to nickel

In rare cases, small amounts of nickel may pass into the food.

24.4 Microwave cooking

If you use the microwave mode, you can reduce the cooking time considerably.

General information

- When using the microwave mode, the cooking time is determined based on the total weight.
  If you want to cook a quantity that differs from the specified quantity, the general rule is **Double the quantity requires just under double the cooking time**.
- The food transfers heat to the cookware. The cookware can become very hot.
- In the main part of the instruction manual, you will find information on how to configure the microwave and microwave combination oven settings.
  - → *"MicroCombi", Page 17*
  - → *"Microwave", Page 16*

Cooking, braising or steaming using the microwave mode

- Use microwave-safe cookware with a lid. Alternatively, you can use a plate or special microwaveable film to cover the dish.
- For cereal products, e.g. rice, use deep cookware with a lid. Cereal products foam a lot during cooking. Add liquid in accordance with the instructions and information provided in the recommended settings tables.
- Do not wash or dry food. Add 1-3 tablespoons of water or lemon juice to the food.
- Spread the food out so that as much of it as possible is in contact with the bottom of the cookware. Food that is in contact with the bottom will cook more quickly than food that is piled up.
- Use salt and seasoning sparingly. When cooking food using the microwave mode, most of the food's natural flavour will be retained.
- Turn or stir the food 2-3 times during cooking.
- After cooking, leave the food to rest for 2-3 minutes.

24.5 Cooking frozen products

- Do not use heavily frosted frozen products.
- Remove any ice.
- Some frozen products may be unevenly pre-baked. Uneven browning may remain even after baking.

24.6 Cooking ready meals

- Take ready meals out of the packaging.

- If you are warming or cooking the ready meal in cookware, make sure that the cookware is heat-resistant.

24.7 List of foods

Recommended settings for a variety of foods, sorted into food categories.

Recommended settings for various types of food

Food	Accessory/cookware	Shelf position	Heating function → *Page 10*	Temperature in °C	Microwave power setting in W	Cooking time in mins
Sponge cake, simple	Ring-shaped tin or Loaf tin	1		160–180	90	30–40
Sponge cake, delicate	Loaf tin	1		150–170	-	60–80
Fruit tart or cheesecake with shortcrust pastry base	Springform cake tin, diameter 26 cm	1		160–170	-	65–85
Fruit tart or cheesecake with shortcrust pastry base	Springform cake tin, diameter 26 cm	1		**1.** 160–180 **2.** 100	**1.** 180 **2.** 0	**1.** 30–40 **2.** 20
Sponge cake, 6 eggs	Springform cake tin, diameter 28 cm	1		150–170 [1]	-	30–50
Sponge cake, 6 eggs	Springform cake tin, diameter 28 cm	1		150–160	-	50–60
Shortcrust tart with moist topping	Universal pan	1		160–180	-	60–80
Muffins	Muffin tray	1		170–190	-	15–30
Small yeast cakes	Baking tray	1		160–170	-	30–40
Biscuits	Baking tray	2		140–160	-	15–30
Biscuits, 2 levels	Universal pan + Baking tray	3+1		130–150	-	20–35
Bread, without a tin, 750 g	Universal pan or Loaf tin	1		**1.** 210–220 [1] **2.** 180–190	-	**1.** 10–15 **2.** 25–35
Bread, without a tin, 1500 g	Universal pan or Loaf tin	1		**1.** 210–220 [1] **2.** 180–190	-	**1.** 10–15 **2.** 40–50
Bread, without a tin, 1500 g	Loaf tin	1		200–210	-	35–45
Flatbread	Universal pan	1		250 - 270	-	20 - 30
Bread rolls, fresh	Baking tray	1		180–200	-	25–35
Pizza, fresh	Baking tray	1		200 - 220	-	20 - 30
Pizza, fresh, on 2 levels	Universal pan + Baking tray	3+1		180 - 200	-	35 - 45
Pizza, fresh, thin-crust, on a pizza tray	Pizza tray	1		210 - 230	-	20 - 30
Quiche	Tart dish or tin , Black tray	1		190–210	-	30–45
Tarte flambée	Universal pan	1		260 - 280 [1]	-	10 - 20

[1] Preheat the appliance.
[2] Turn the dish 2/3 of the way through the cooking time.
[3] Stir the food one or two times during cooking.

Food	Accessory/cookware	Shelf position	Heating function → *Page 10*	Temperature in °C	Microwave power setting in W	Cooking time in mins
Bake, savoury, cooked ingredients	Ovenproof dish	1		200 - 220	-	35 - 55
Bake, savoury, cooked ingredients	Ovenproof dish	1		140 - 160	360	20 - 30
Lasagne, frozen, 400 g	Uncovered cookware	1		200 - 210	180	20 - 25
Potato gratin, raw ingredients, 4 cm deep	Ovenproof dish	1		170 - 180	-	50 - 65
Potato gratin, raw ingredients, 4 cm deep	Ovenproof dish	1		170 - 190	360	20 - 25
Chicken, 1 kg, unstuffed	Uncovered cookware	1		200 - 220	-	60 - 70
Chicken, 1 kg, unstuffed	Covered cookware	1		230 - 250	360	25 - 35
Small chicken portions, 250 g each	Wire rack	2		220 - 230	-	30 - 35
Small chicken portions, x 4, 250 g each	Uncovered cookware	1		190 - 210	360	20 - 30
Goose, unstuffed, 3 kg	Uncovered cookware	1		160 - 170	-	120 - 150
Joint of pork without rind, e.g. neck, 1.5 kg	Uncovered cookware	1		180 - 200	-	120 - 130
Joint of pork without rind, e.g. neck, 1.5 kg	Covered cookware	1		180 - 200	180	55 - 65
Joint of pork without rind, e.g. neck, 1.5 kg	Uncovered cookware	1		180 - 190	-	120 - 140
Fillet of beef, medium, 1 kg	Uncovered cookware	1		210 - 220	-	40 - 50
Pot-roasted beef, 1.5 kg	Covered cookware	1		200 - 220	-	130 - 140
Pot-roasted beef, 1.5 kg	Covered cookware	1		200 - 220	-	140 - 160
Sirloin, medium, 1.5 kg	Uncovered cookware	1		220 - 230	-	60 - 70
Sirloin, medium, 1.5 kg	Uncovered cookware	1		240 - 260	180	30 - 40
Burger, 3-4 cm thick	Wire rack	2		3	-	20 - 30 [2]
Leg of lamb, boned, medium, 1.5 kg	Uncovered cookware	1		170 - 190	-	50 - 70
Leg of lamb, boned, medium, 1.5 kg	Covered cookware	1		240 - 260	**1.** 360 **2.** 180	**1.** 30 **2.** 35 - 40
Meat loaf, 1 kg, + 50 ml water	Uncovered cookware	1		170 - 190	360	30 - 40
Fish, grilled, whole, 300 g, e.g. trout	Uncovered cookware	1		170–190	-	20–30
Fish, grilled, whole, 300 g, e.g. trout	Wire rack	2		2	90	15–20
Vegetables, fresh, 250 g	Covered cookware	1		-	600	8 - 12 [3]
Baked potatoes, halved, 1 kg	Universal pan	2		200 - 220	360	15 - 20
Peeled boiled potatoes, quartered, 500 g	Covered cookware	1		-	600	12 - 15 [3]
Long-grain rice, 250 g,+ 500 ml water	Covered cookware	1		-	**1.** 600 **2.** 180	**1.** 7 - 9 **2.** 13 - 16

[1] Preheat the appliance.
[2] Turn the dish 2/3 of the way through the cooking time.
[3] Stir the food one or two times during cooking.

Food	Accessory/cookware	Shelf position	Heating function → *Page 10*	Temperature in °C	Microwave power setting in W	Cooking time in mins
Millet, whole, 250 g, + 600 ml water	Covered cookware	1		-	**1.** 600 **2.** 180	**1.** 8 - 10 **2.** 10 - 15
Polenta or maize semolina, 125 g, + 500 ml water	Covered cookware	1		-	600	6 - 8 [3]

[1] Preheat the appliance.
[2] Turn the dish 2/3 of the way through the cooking time.
[3] Stir the food one or two times during cooking.

Desserts

Using the microwave mode to make popcorn

⚠ **WARNING – Risk of burns!**

Airtight packaging may burst when food is heated.

- Always follow the instructions on the packaging.
- Always use oven gloves to remove the dishes from the cooking compartment.

1. Use shallow, heat-resistant glass cookware, e.g. the lid of an ovenproof dish.
   Do not use porcelain or deep plates.
2. Place the popcorn bag onto the cookware according to the instructions on the packaging.
3. Use the recommended settings when configuring the appliance settings.
4. The time may need to be adjusted, depending on the product and quantity in question.
5. Remove the popcorn bag after 1½ minutes and shake it to ensure that the popcorn doesn't burn.
6. Place the popcorn bag back into the oven and leave it to continue popping.
7. Once you can only hear popping noises once every 2-3 seconds, switch off the appliance and take the popcorn bag out of the oven.
8. Wipe the cooking compartment clean afterwards.

Making yoghurt

1. Remove the accessories and shelves from the cooking compartment.
2. Heat 1 litre of whole milk (3.5% fat) to 90 °C on the hob and then leave it to cool down to 40 °C.
   It is sufficient to heat UHT milk to 40 °C.
3. Mix 150 g of chilled yoghurt into the milk.
4. Pour the mixture into small containers, e.g. cups or small jars.
5. Cover the containers with film, e.g. cling film.
6. Place the containers on the cooking compartment floor.
7. Use the recommended settings when configuring the appliance settings.
8. After making the yoghurt, leave it to cool in the refrigerator for at least 12 hours.

Recommended settings for desserts and compote

Food	Accessory/cookware	Shelf position	Heating function → *Page 10*	Temperature in °C	Microwave power setting in W	Cooking time in mins
Blancmange made from blancmange powder	Covered cookware	1		-	600	5 - 8 [1]
Yoghurt	Individual moulds	Cooking compartment floor		40 - 45	-	8 - 9 hrs
Rice pudding, 125 g, + 500 ml milk	Covered cookware	1		-	**1.** 600 **2.** 180	**1.** 10 **2.** 20 - 25 [1]
Fruit compote, 500 g	Covered cookware	1		-	600	9 - 12
Microwave popcorn, 1 x 100 g bag [2]	Uncovered cookware	1		-	600	4 - 6

[1] Stir the food one or two times during cooking.
[2] Place the sealed bag on the cookware.

24.8 Special cooking methods and other applications

Information and recommended settings for special cooking methods and other applications, e.g. slow cooking or preserving.

Slow cooking

Cook prime cuts of meat slowly at a low temperature, e.g. tender cuts of beef, veal, lamb or poultry.

Slow cooking poultry or meat

Note: When using the slow cooking type of heating, you cannot delay the start of the programme by setting an end time.

Requirement: The cooking compartment is cold.

1. Use fresh, clean, hygienic meat without bones.
2. Place the cookware onto the wire rack at level 1 in the cooking compartment.
3. Preheat the cooking compartment and cookware for approx. 15 minutes.
4. Sear the meat on all sides on the hob at a very high heat.
5. Immediately place the meat into the pre-warmed cookware in the cooking compartment.
   To ensure that the climate in the cooking compartment remains constant, keep the cooking compartment door closed during slow cooking.
6. After slow cooking, remove the meat from the cooking compartment.

Recommended settings for slow cooking

Food	Accessory/cookware	Shelf position	Searing time in mins	Heating function → *Page 10*	Temperature in °C	Cooking time in mins
Duck breast, medium rare, 300 g each	Uncovered cookware	1	6 - 8		95 [1]	45 - 60
Fillet of pork, whole	Uncovered cookware	1	4 - 6		85 [1]	45 - 70
Fillet of beef, 1 kg	Uncovered cookware	1	4 - 6		85 [1]	90 - 120
Veal medallions, 4 cm thick	Uncovered cookware	1	4		80 [1]	40 - 60
Saddle of lamb, boneless, 200 g each	Uncovered cookware	1	4		85 [1]	30 - 45

[1] Preheat the appliance.

Defrosting

You can defrost frozen food in your appliance.

Tips for defrosting food

- You can use the "microwave" mode to defrost frozen fruit, vegetables, poultry, meat, fish or baked goods.
- Remove frozen food from its packaging before you defrost it.
- Use heat-resistant, microwave-safe cookware.
- The recommended settings are for freezer-temperature food (-18 °C).
- Defrosting works best if you divide it into more than one step. The steps are listed one after the other in the recommended settings tables.
- Stir or turn the food 1-2 times during defrosting. Turn large items several times. Split the food into smaller pieces as it defrosts.
  Remove pieces that have already defrosted from the cooking compartment.
- Once the food has defrosted, switch off the appliance and leave the food in the appliance for another 10 to 30 minutes to allow the temperature to equalise.

Recommended settings for defrosting

Food	Accessory/cookware	Shelf position	Heating function → *Page 10*	Temperature in °C	Microwave power setting in W	Cooking time in mins
Bread, 500 g	Uncovered cookware	1		-	**1.** 180 **2.** 90	**1.** 3 **2.** 10 - 15
Bread, 500 g	Uncovered cookware	1		-	**1.** 180 **2.** 90	**1.** 3 **2.** 10 - 15
Bread rolls	Wire rack	1		140 - 160	90	2 - 4
Bread rolls	Wire rack	1		140 - 160	90	2 - 4
Cakes, moist, 500 g	Uncovered cookware	1		-	**1.** 180 **2.** 90	**1.** 2 **2.** 10 - 15
Cakes, dry, 750 g	Uncovered cookware	1		-	90	10 - 15

[1] Turn the dish halfway through the cooking time.

Food	Accessory/cookware	Shelf position	Heating function → *Page 10*	Temperature in °C	Microwave power setting in W	Cooking time in mins
Meat, whole, e.g. joint, raw meat, 1 kg	Uncovered cookware	1		-	**1.** 180 **2.** 90	**1.** 15 **2.** 20 - 30 [1]
Minced meat, mixed, 500 g	Uncovered cookware	1		-	**1.** 180 **2.** 90	**1.** 5 **2.** 10 - 15 [1]
Chicken, whole, 1.2 kg	Uncovered cookware	1		-	**1.** 180 **2.** 90	**1.** 10 **2.** 10 - 15 [1]
Fish, whole, 300 g	Uncovered cookware	1		-	**1.** 180 **2.** 90	**1.** 3 **2.** 10 - 15 [1]
Berries, 300 g	Uncovered cookware	1		-	180	5 - 10
Butter, defrosting, 125 g	Uncovered cookware	1		-	90	7 - 9

[1] Turn the dish halfway through the cooking time.

Warming up food using the microwave mode

You can use the microwave mode to warm up food or to defrost and warm up food in a single step.

Tips for warming up food using the microwave mode

- Use microwave-safe cookware with a lid.
- Turn or stir the food 2-3 times during warming.
- After warming up the food, leave it to rest for 1-2 minutes.
- The food transfers heat to the cookware. The cookware can become very hot.
- Make sure that you do the following when you are warming up baby food:
  - Place bottles on the wire rack without the teat or lid.
  - Shake or stir the baby food well after warming it up.
  - Always check the temperature of the baby food.
- Wipe the cooking compartment dry after using it to warm up food.

⚠ WARNING – Risk of scalding!

There is a possibility of delayed boiling when a liquid is heated. This means that the liquid reaches boiling temperature without the usual steam bubbles rising to the surface. Even if the container only vibrates a little, the hot liquid may suddenly boil over and spatter.

- Always place a spoon in the container when heating liquids. This will prevent delayed boiling.

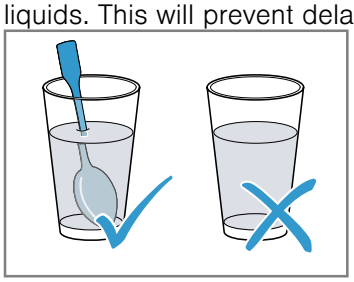

ATTENTION!

Metal touching the wall of the cooking compartment will cause sparks, which may damage the appliance or the inner door pane.

- Metal (e.g. a spoon in a glass) must be kept at least 2 cm from the cooking compartment walls and the inside of the door.

Recommended settings for warming up food using the microwave mode

Food	Accessory/cookware	Shelf position	Heating function → *Page 10*	Temperature in °C	Microwave power setting in W	Cooking time in mins
Drinks, warming up, 200 ml	Uncovered cookware	1		-	1000	1 - 3 [1]
Baby food, heating up, e.g. baby bottle, 150 ml	Uncovered cookware	1		-	360	1 - 3 [1]
Vegetables, chilled, 250 g	Covered cookware	1		-	600	3 - 8
Side dishes, e.g. pasta, dumplings, potatoes, rice Chilled	Covered cookware	1		-	600	5 - 10

[1] Stir the food well.

Food	Accessory/cookware	Shelf position	Heating function → *Page 10*	Temperature in °C	Microwave power setting in W	Cooking time in mins
Soup, stew, 400 ml Chilled	Covered cookware	1		-	600	5 - 7
Plated meal, 1 portion Chilled	Covered cookware	1		-	600	4 - 8
Bakes, 400 g, e.g. lasagne, potato gratin	Uncovered cookware	1		180 - 200	180	20 -25
Side dishes, 500 g, e.g. pasta, dumplings, potatoes, rice Frozen	Covered cookware	1		-	600	7 - 10
Soup, stew, 200 ml Frozen	Covered cookware	1		-	600	4 - 6 [1]
Plated meal, 1 portion Frozen	Covered cookware	1		-	600	11 - 15

[1] Stir the food well.

Keeping food warm

Tips for keeping food warm

- Using the "Keep warm" heating function prevents condensation from forming. You will not have to wipe down the cooking compartment.
- To prevent the food from drying out, you can cover it.
- Do not keep food warming for longer than 2 hours.
- Be aware that some types of food will actually continue cooking when you are keeping them warm in the oven.

24.9 Test dishes

The information in this section is provided for test institutes to facilitate testing of the appliance in accordance with EN 60350-1:2013 or IEC 60350-1:2011 and EN 60705:2012 or IEC 60705:2010.

Baking

- The setting values apply to food that is placed into a cold cooking compartment.
- Please take note of the information on preheating in the recommended settings tables. These setting values assume that the rapid heat-up function is not being used.
- For baking, use the lower of the specified temperatures to start with.
- Items that are placed in the appliance on baking trays or in baking tins/dishes at the same time will not necessarily be ready at the same time.
- Shelf positions when baking on 2 levels:
  - Universal pan: Shelf position 3
    Baking tray: Shelf position 1
- Hot water sponge cake
  - When baking on two levels, place the springform tins at diagonally opposite corners of the wire racks.

Recommended settings for baking

Food	Accessory/cookware	Shelf position	Heating function → *Page 10*	Temperature in °C	Cooking time in mins
Viennese whirls	Baking tray	1		150–160 [1]	20–30
Viennese whirls	Baking tray	1		140–150 [1]	25–35
Small cakes	Baking tray	1		160 [1]	25–35
Small cakes	Baking tray	1		150 [1]	20–30
Small cakes	Baking tray	1		150 [1]	20–30
Small cakes, 2 levels	Universal pan + Baking tray	3+1		140 [1]	30–40

[1] Preheat the appliance for five minutes. Do not use the rapid heating function.
[2] Preheat the appliance. Do not use the rapid heating function.

Food	Accessory/cookware	Shelf position	Heating function → *Page 10*	Temperature in °C	Cooking time in mins
Hot water sponge cake	Springform cake tin, diameter 26 cm	1		160–170 [2]	25–35
Hot water sponge cake	Springform cake tin, diameter 26 cm	1		160–170 [2]	30–45

[1] Preheat the appliance for five minutes. Do not use the rapid heating function.
[2] Preheat the appliance. Do not use the rapid heating function.

Recommended settings for grilling

Food	Accessory/cookware	Shelf position	Heating function → *Page 10*	Temperature in °C/ grill setting	Cooking time in mins
Toasting bread	Wire rack	3		3	3–6

Microwave cooking

- If you use the wire rack, slide it into the cooking compartment with the **Microwave** imprint facing the appliance door and the bump pointing downwards.
- To test the microwave mode on its own, switch off the drying function in the basic settings. → *Page 20*

Recommended settings for defrosting food using the microwave mode

Food	Accessories/cookware	Shelf position	Heating function → *Page 10*	Microwave power setting in W	Cooking time in mins
Meat	Uncovered cookware	1		**1.** 180 **2.** 90	**1.** 5 **2.** 10–15

Recommended settings for microwave cooking

Food	Accessories/cookware	Shelf position	Heating function → *Page 10*	Microwave power setting in W	Cooking time in mins
Egg wash	Uncovered cookware	1		**1.** 360 **2.** 180	**1.** 20 **2.** 20–25
Sponge	Uncovered cookware	1		600	7–9
Meat loaf	Uncovered cookware	1		600	22–27

Recommended settings for cooking in combination with the microwave mode

Food	Accessory/cookware	Shelf position	Heating function → *Page 10*	Temperature in °C	Microwave power setting in W	Cooking time in mins
Potato gratin	Uncovered cookware	1		150 - 170	360	25 - 30
Cakes	Uncovered cookware	1		190 - 210	180	12 - 18
Chicken	Uncovered cookware	1		180 - 200	360	25 - 35 [1]

[1] Turn the dish 2/3 of the way through the cooking time.

25 Installation instructions

Observe this information when installing the appliance.

25.1 General installation instructions

Follow these instructions before you start with the installation of the appliance.

- The installation cabinet must not have a back panel behind the appliance. There should be a gap of at least 35 mm between the wall and the cabinet base as well as the rear panel of the cabinet situated above.
- Ventilation slots and intake openings must not be covered.
- The safe operation of this appliance can only be guaranteed if it has been installed to a professional standard in accordance with these installation instructions. The installer shall be liable for damages incurred as a result of incorrect installation.
- Check the appliance for damage after unpacking it. Do not connect the appliance if it has been damaged in transit.
- Before starting up the appliance, remove any packaging material and adhesive film from the cooking compartment and the door.
- Proceed in accordance with the installation sheets for installing accessories.
- Fitted units must be heat-resistant up to 95 °C, and adjacent unit fronts up to 70 °C.
- Do not install the appliance behind a decorative door or the door of a kitchen unit. There is a risk of overheating.
- Cut-out work on the units should be carried out before installing the appliance. Remove any shavings. Otherwise, the correct operation of electrical components may be adversely affected.
- The mains socket for the appliance must either be located in the hatched area a or outside of the area where the appliance is installed.
  Any unsecured units must be secured to the wall using a standard bracket b.

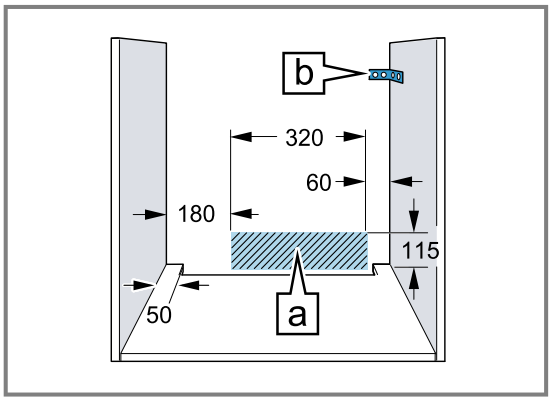

- Wear protective gloves so that you do not cut yourself. Parts that are accessible during installation may have sharp edges.
- Dimensions of the figures in mm.

⚠ WARNING – Danger: Magnetism!

Permanent magnets are used in the control panel or in the controls. They may affect electronic implants, e.g. pacemakers or insulin pumps.

- ▸ Wearers of electronic implants must stay at least 10 cm away from the control panel or controls during the installation.

⚠ WARNING – Risk of fire!

It is dangerous to use an extended power cord and non-approved adapters.

- ▸ Do not use multiple socket strips.
- ▸ Only use extension cables that are certified, have a minimum cross section of 1.5 mm² and comply with the applicable national safety requirements.
- ▸ If the power cord is too short, contact customer service.
- ▸ Only use adapters approved by the manufacturer.

ATTENTION!

Carrying the appliance by the door handle could break it. The door handle cannot support the weight of the appliance.

- ▸ Do not carry or hold the appliance by the door handle.

25.2 Appliance dimensions

You will find the dimensions of the appliance here

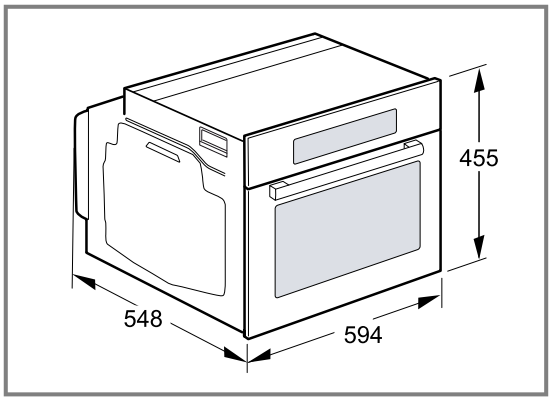

25.3 Installation below a worktop

Observe the installation dimensions and the installation instructions when installing below a worktop.

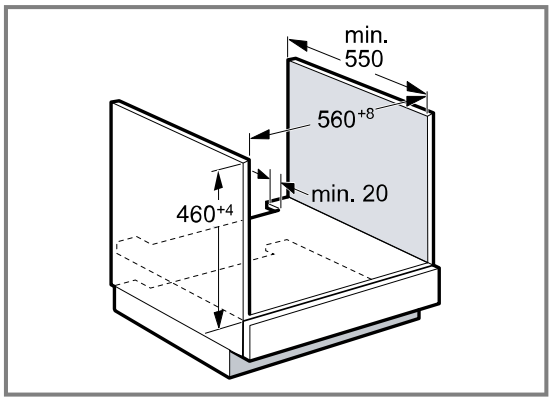

- To ventilate the appliance, the intermediate floor must have a ventilation cut-out.
- The worktop must be secured to the fitted unit.
- Observe any available installation instructions for the hob.
- Observe different national installation instructions for the hob.

25.4 Installation underneath a hob

If the appliance is installed under a hob, the following minimum dimensions must be adhered to (including substructure, if applicable).

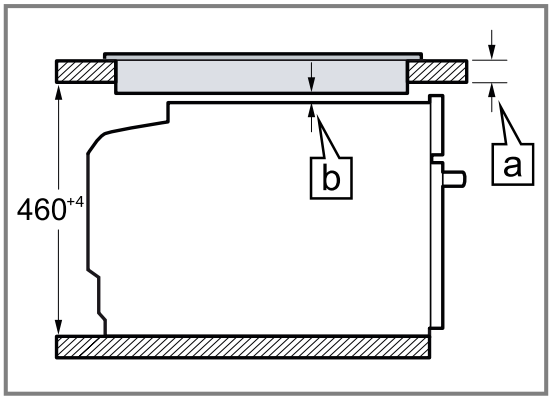

The minimum worktop thickness b a is based on the required minimum clearance a.

Hob type	a raised in mm	a flush in mm	b in mm
Induction hob	42	43	5
Full-surface induction hob	52	53	5
Gas hob	32	43	5[1]
Electric hob	32	35	2

[1] Observe different national installation instructions for the hob.

25.5 Installation in a tall unit

Observe the installation dimensions and the installation instructions when installing in a tall unit.

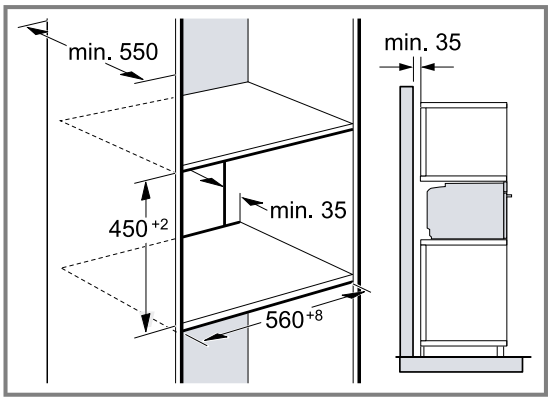

- To ventilate the appliance, the intermediate floors must have a ventilation cut-out.
- In order to ensure sufficient ventilation of the appliance, there must be a ventilation opening of at least. 200 cm² in the base area. To do this, trim the base panel or fit a ventilation grille. Ensure that the air exchange is guaranteed in accordance with the diagram.

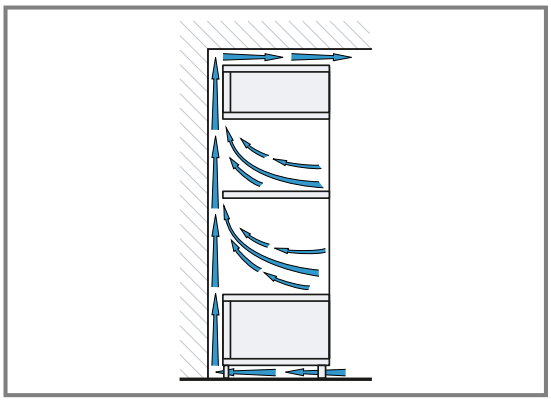

- If the tall unit has another back panel in addition to the element back panels, this must be removed.
- Only fit the appliance up to a height which allows accessories to be easily removed.

25.6 Corner installation

Observe the installation dimensions and the installation instructions when installing in a corner.

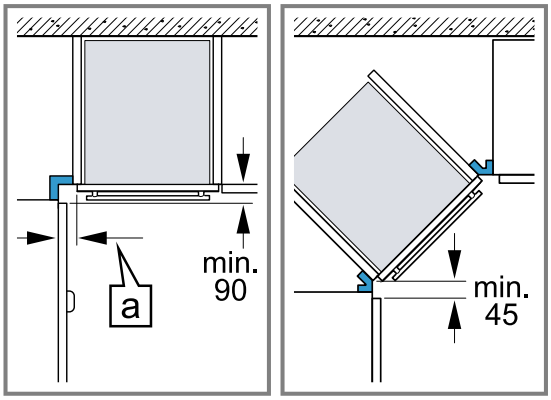

- To ensure that the appliance door can be opened, you must take the minimum dimensions into consideration when installing in a corner. The dimension a is dependent on the thickness of the unit front and the handle.

25.7 Electrical connection

In order to safely connect the appliance to the electrical system, follow these instructions.

- The appliance corresponds to protection class I and must only be operated with a protective earth connection.
- The fuse protection must correspond to the power rating specified on the appliance's rating plate and to the local regulations.
- The appliance must be disconnected from the power supply whenever installation work is being carried out.
- The appliance must only be connected using the power cable provided.
- The power cable must be plugged in at the rear of the appliance until you hear a clicking sound. A 3 m power cable can be obtained from the after-sales service.
- The power cable must only be replaced with a cable from the original manufacturer. This is available from after-sales service.
- Contact protection must be guaranteed by the installation.

Electrically connect the appliance with the protective contact plug

Note: The appliance must only be connected to a protective contact socket that has been correctly installed.

- Insert the plug into the protective contact socket. When the appliance is installed, the mains plug of the power cord must be freely accessible. If free access is not possible, an isolating switch must be integrated into the permanent electrical installation according to the installation regulations.

Electrically connecting an appliance without a protective contact plug

Note: Only licensed specialists may connect the appliance. Damage caused by incorrect connection is not covered under the warranty.
An isolating switch must be integrated into the permanent electrical installation according to the installation regulations.

1. Identify the phase and neutral conductors in the socket.
   The appliance may be damaged if it is not connected correctly.
2. Connect the hob in accordance with the connection diagram.
   See the rating plate for the voltage.
3. Connect the wires of the mains power cable according to the colour coding:
   - Green/yellow = Protective conductor ⏚
   - Blue = Neutral conductor
   - Brown = Phase (external conductor)

25.8 Installing the appliance

1. Slide the appliance in fully and centre it.

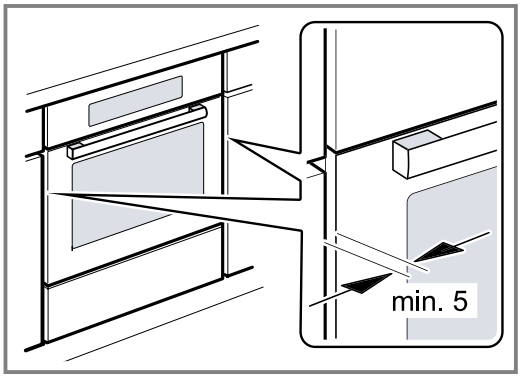

2. Screw the appliance into place.

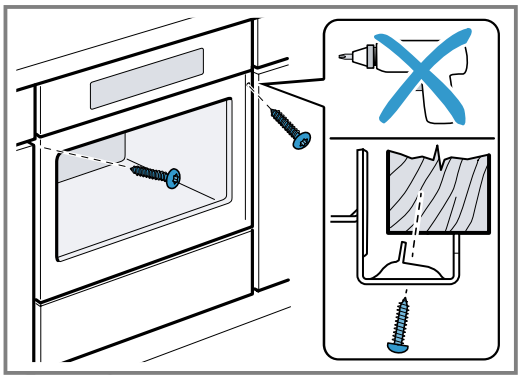

3. For handleless kitchens with vertical bar handle strips:
   - Attach a suitable filling piece ① in order to cover any sharp edges and to guarantee a safe installation.
   - Pre-drill aluminium profiles to establish a screw connection ②.
   - Secure the appliance using a suitable screw ③.

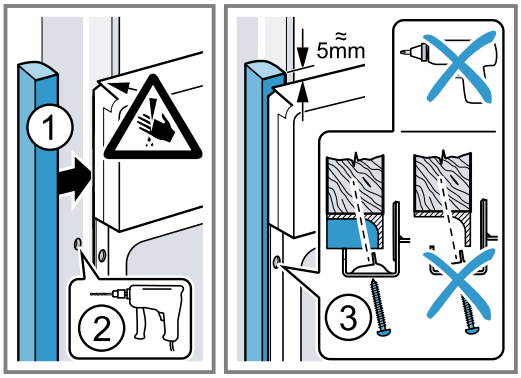

Note: The gap between the worktop and the appliance must not be closed by additional battens.
Thermal insulation strips must not be fitted to the side panels of the surround unit.

25.9 Removing the appliance

1. Disconnect the appliance from the power supply.
2. Undo the fastening screws.
3. Lift the appliance slightly and pull it out completely.

Thank you for buying a Bosch Home Appliance!

Register your new device on MyBosch now and profit directly from:

- **Expert tips & tricks for your appliance**
- **Warranty extension options**
- **Discounts for accessories & spare-parts**
- **Digital manual and all appliance data at hand**
- **Easy access to Bosch Home Appliances Service**

Free and easy registration – also on mobile phones:
www.bosch-home.com/welcome

Looking for help? You'll find it here.

Expert advice for your Bosch home appliances, help with problems or a repair from Bosch experts.
Find out everything about the many ways Bosch can support you:
www.bosch-home.com/service
Contact data of all countries are listed in the attached service directory.

BSH Hausgeräte GmbH
Carl-Wery-Straße 34
81739 München, GERMANY
www.bosch-home.com

A Bosch Company

9001666105 (021011)
en

Valid within Great Britain:
Imported to Great Britain by
BSH Home Appliances Ltd.
Grand Union House
Old Wolverton Road
Wolverton, Milton Keynes
MK12 5PT
United Kingdom